rehlko

REHLKO *MF* Series

Modular high power three-phase uninterruptible power supply

(250 – 1500 kVA/kW)
Scalable to 6000 kVA/kW

User Manual

Document Control

ISSUE	DATE	REVISION SUMMARY
TS_865_01		Rebranded to KUP International version
TS_865_02	12/05/2026	Rebranded to Rehlko
TS_865_03	13/10/2026	500 and 750kVA frames added, weights updated

Useful Contacts

UK

www.ups.rehlko.co.uk	Rehlko web site
ukservice.ups@rehlko.com	Service department – booking service, fault reporting etc.
uktechnicalsupport.ups@rehlko.com	Technical queries
uksales.ups@rehlko.com	Hardware sales
ukservicesales.ups@rehlko.com	Extended warranty agreements etc

IRELAND

www.ups.rehlko.ie	Rehlko web site
ieinfo.ups@rehlko.com	Service department, technical queries, hardware sales and extended warranty agreements

SINGAPORE

www.ups.rehlko.sg	Rehlko web site
salesups.sg@rehlko.com	Hardware sales
serviceups.sg@rehlko.com	Contract customer support, maintenance contracts renewals

All product, product specifications and data are subject to change without notice to improve reliability, function, design or otherwise. Rehlko has taken every precaution to produce an accurate, complete and easy to understand specification document and will assume no responsibility nor liability for direct, indirect or accidental personal or material damage due to any misinterpretation of, or accidental errors, in this manual.

© 2026 Rehlko

This document may not be copied or reproduced without written permission of Rehlko.

Warranty

The PW MF1500 DPA UPS is supplied with a limited warranty that the UPS and its component parts are free from defects in materials and workmanship for a period of one year from the date of original commissioning, or fifteen months from the date of original delivery, whichever is the sooner. This warranty is the only warranty given and no other warranty, express or implied, is provided.

This warranty is invalidated if the UPS is used without having first been commissioned by a fully trained and authorised person. This warranty does not apply to any losses or damages caused by misuse, abuse, negligence, neglect, unauthorised repair or modification, incorrect installation, inappropriate environment, accident, act of God or inappropriate application.

If the UPS fails to conform to the above within the warranty period then Rehlko will, at its sole option, repair or replace the UPS. All repaired or replaced parts will remain the property of Rehlko.

As a general policy, Rehlko does not recommend the use of any of its products in life support applications where failure or malfunction of the product can be reasonably expected to cause failure of the life support device or to significantly affect it's safety or effectiveness. Rehlko does not recommend the use of any of its products in direct patient care. Rehlko will not knowingly sell its products for use in such applications unless it receives in writing assurances satisfactory to Rehlko that the risks of injury or damage have been minimized, the customer assumes all such risks and the liability of Rehlko is adequately protected under the circumstances

CAUTION: The UPS system may contain batteries which must be re-charged for a minimum of 24 hours every six months to prevent deep-discharging. Batteries that have been, for whatever reason, deeply-discharged are not covered by the warranty.

Extended Warranty

The Standard Warranty may be enhanced by protecting the UPS with an Extended Warranty Agreement (maintenance contract). An Extended Warranty Agreement enhances the standard warranty by providing:

- Regular preventative maintenance inspections
- Guaranteed speed of response to operational problems
- 24 hour telephone support
- Fully comprehensive (excluding batteries) cover

Additional Service/Maintenance Support

In addition to providing support for the PW MF1500 DPA, Rehlko can provide maintenance and support of a wide range of different UPS products.

If you are interested in obtaining an extended warranty for your PW MF1500 DPA, or require service/maintenance support for any other UPS you may have, please contact Rehlko.

© Rehlko 2026

Contents

1. Safety **1**
1.1 Description of symbols used in this manual 1
1.2 User precautions 1
1.3 Declaration of Safety conformity and CE marking 2

2. General Description **3**
2.1 Introduction 3
2.2 Model range 4
2.2.1 Cabinet construction 6
2.2.2 System expansion and parallel cabinets 8
2.3 Parallel module operation 9
2.3.1 Parallel control in a single cabinet 9
2.3.2 Control in a parallel-cabinet system 10
2.3.3 Capacity' v 'Redundancy' parallel UPS systems 10
2.4 Functional description of operation 11
2.4.1 PW MF1500 DPA module block diagram 11
2.4.2 UPS Module operating modes 13
2.4.3 UPS System operating modes 14
2.4.4 Xtra VFI 15
2.5 Module Control Panel 18
2.5.1 ON/OFF button 18
2.5.2 LED indicators 18
2.5.3 LCD Display 19
2.5.4 Control Buttons 19
2.5.5 Module control panel menu configuration 20
2.6 UPS Communication facilities 21
2.6.1 Communications interface board 22
2.6.2 Parallel interface board 23
2.6.3 High voltage I/O interface 24

3. System Control Panel **25**
3.1 Introduction 25
3.1.1 Display header bar 26
3.2 HOME screen 27
3.2.1 Events 27
3.2.2 Measures 28
3.2.3 Commands 29
3.2.4 UPS Data 29
3.2.5 User 29
3.3 MIMIC screen 30
3.3.1 MIMIC screen indications 31
3.3.2 Metering from the MIMIC screen 33
3.4 XTRA VFI screen(s) 34
3.5 MODULE SELECTION screen 36

© Rehlko 2026

4. Installation Planning **37**
4.1 Introduction 37
4.2 Environmental and mechanical planning 37
4.2.1 Environmental considerations 37
4.2.2 Installation clearances 37
4.2.3 Floor fixings 39
4.3 Electrical planning 40
4.3.1 General cabling requirements 41
4.3.2 Power cabling options 45
4.3.3 Battery configuration 48
4.3.4 Battery cabling 50
4.3.5 Control cables 50
4.3.6 Fuse & cable sizing 51
4.3.7 Input/output supply protection 51

5. Installation Procedure **52**
5.1 Introduction 52
5.2 Taking receipt of the UPS 52
5.2.1 Reporting transportation damage 53
5.2.2 Local transportation 53
5.2.3 Storage 53
5.3 Unpacking 54
5.4 1500 kVA Cabinet installation 56
5.4.1 Cabinet installation kit 56
5.4.2 Joining the cabinets 57
5.4.3 Connecting the busbars 62
5.4.4 Connecting the control cables 63
5.4.5 Final positioning 64
5.4.6 Refit the UPS modules 64
5.5 1000 kVA Cabinet installation 65
5.5.1 Final positioning 65
5.6 Electrical installation 66
5.6.1 Safety notes 66
5.6.2 Power cable connections 66

6. Operating Instructions **70**
6.1 Introduction 70
6.1.1 General warnings 70
6.2 Useful operating notes 70
6.2.1 Module control panel leds 70
6.2.2 External maintenance bypass switch 71
6.2.3 Operating procedure summary 71
6.2.4 Start/stop operating sequence 71
6.3 How to start the UPS system from a fully powered down condition 73
6.3.1 Power-up the load (Maintenance Bypass) 73
6.3.2 Turn on the UPS modules 73

© Rehlko 2026

6.3.3 Transfer the load to static bypass 74
6.3.4 Transfer the load to inverter 74
6.4 How to start the UPS system from the maintenance bypass 75
6.4.1 Power up procedure 75
6.5 How to transfer the load from inverter to the maintenance bypass 76
6.5.1 Transfer the load to the UPS static bypass 76
6.5.2 Transfer the load to maintenance bypass 77
6.5.3 Turn off the UPS modules 77
6.6 How to completely shut down the UPS system 78
6.6.1 System shutdown 78
6.7 Operating in ECO mode 79
6.7.1 How to turn on the UPS system and operate in ECO mode 79
6.7.2 How to shut down the UPS system when operating in bypass mode 79
6.7.3 How to manually transfer between bypass mode and inverter mode 79
6.7.4 Load transfer using the system control panel 80
6.8 Individual module stop/start procedure (redundant system only) 81
6.9 Cold start 82

7. Maintenance 83
7.1 Introduction 83
7.2 User responsibilities 83
7.3 Routine maintenance 83
7.4 Battery testing 83

8. Troubleshooting 84
8.1 Introduction 84
8.1.1 Alarms 84
8.1.2 Events log 84
8.2 Troubleshooting procedure 85
8.3 Troubleshooting table 86
8.4 Contacting service 86

9. Options 87
9.1 UPS Communications panel 87
9.2 Communications interface 88
9.2.1 Input dry port (X1) 90
9.2.2 Output dry port (X2) 92
9.2.3 Battery temperature sensor (X3) 92
9.2.4 MODBUS Communications bus (X4) 93
9.2.5 CAN BUS Communications bus (X5) 93
9.2.6 Analog input port (X6) 93
9.2.7 Configurable input dry port (X7) 93
9.2.8 Configurable input dry port (X8) 94
9.2.9 +24 Vdc Output port (X9) 94
9.2.10 Configurable output dry port (X10) 94
9.2.11 Configurable output dry port (X11) 95
9.2.12 Serial RS-232 (J1) and USB computer interface 95

© Rehlko 2026

9.2.13 Graphical display interface (J3) 95
9.2.14 Status LEDs 95
9.3 High voltage interface board 96
9.3.1 High voltage configurable input dry port (X12) 96
9.3.2 High voltage configurable output dry port (X13) 96
9.3.3 Synchronisation input port (X14) 96
9.4 Parallel interface 97
9.5 Network interface card slots 98
9.6 UPS Monitoring and automated control software 99
9.6.1 The importance of UPS management 99
9.6.2 SNMP monitoring software 99
9.6.3 WAVEMON UPS monitoring and control software 99
9.6.4 PowerREPORTER™ management software 100

10. Specification 102
10.1 UPS Cabinet general specification 102
10.1.1.500 kVA/kW Cabinet 102
10.1.2 750 kVA/kW Cabinet 102
10.1.3 1000 kVA/kW Cabinet 103
10.1.4 1500 kVA/kW Cabinet 103
10.2 Electrical characteristics 104
10.3 Battery 105
10.4 Environmental and standards 106

© Rehlko 2026

1. Safety

1.1 Description of symbols used in this manual

WARNING: The warning symbol is used where there is danger of an electrical shock, equipment damage or personal injury.

CAUTION: *The caution symbol is used to highlight important information to avoid possible equipment malfunction or damage.*

1.2 User precautions

WARNING: Keep this manual with the UPS for future reference.

WARNING: The UPS and peripheral equipment must be installed by suitably qualified and trained personnel who are aware of the potential shock hazards.

WARNING: Do not attempt to install this UPS system until you have read and understood ALL the safety instructions and hazard warnings contained in this manual.

WARNING: High leakage current!

Ensure that the UPS has been correctly earthed before you connect the mains power supply.

WARNING: Do not apply electrical power (AC or DC) to the UPS system before it has been commissioned by a Rehlko approved engineer.

WARNING: Do not attempt to operate the UPS system until it has been fully commissioned and handed over. The commissioning engineer will provide operator training as part of the commissioning procedure.

WARNING: Do not open or remove the UPS covers. You run a risk of exposure to potentially lethal voltages if you open or remove the UPS covers! All servicing must be performed by a Rehlko approved engineer.

WARNING: When operating this equipment always follow the procedures contained in this User Manual. Rehlko will assume no responsibility or liability for accidents or injuries due to incorrect operation or manipulation of the UPS or peripheral equipment.

CAUTION: *The PW MF1500 DPA is a Class A UPS product (according to EN 62040-3). In a domestic environment the UPS may cause radio interference. In such an environment the user may be required to undertake additional measures.*

© Rehlko 2026

1.3 Declaration of Safety conformity and CE marking

The PW MF1500 DPA UPS system is designed and manufactured in accordance with Quality Management Systems standard ISO 9001 / EN 29001. The CE marking indicates conformity to the EEC Directive by the application of the following standards in accordance with the specifications of the harmonized standards:

- 2014/35/EC Low voltage directive
- 2014/30/EC Electromagnetic Compatibility directive (EMC)
- 2011/65/EU (incl. 2015/863/EU) R0HS Directive

Standards as reference:

- EN-IEC 62040-1
- Uninterruptible power supply (UPS). Part 1-1: General and safety requirements for UPS's used in accessible areas by end users.
- EN-IEC 60950-1
- IT equipment. Safety. Part 1: General requirements
- EN-IEC 62040-2
- Uninterruptible power supply (UPS). Part 2: EMC requirements
- EN-IEC 62040-3
- Uninterruptible power systems (UPS). Part 3: Performance and test requirements
- 2011/65/EU
- Restriction of the use of certain hazardous substances (RoHS) DIRECTIVE

The supplier's responsibility is excluded if the customer modifies, or intervenes with, this product in any way.

	Product Standards	Standards
Safety	EC/EN 62040-1	EC/EN 60950-1
Electromagnetic Compatibility (EMC)	IEC/EN 62040-2 Emission cat. C3 Immunity cat. C3	IEC/EN 61000-6-2 IEC/EN 61000-6-4 IEC/EN 61000-4-2 IEC/EN 61000-4-3 IEC/EN 61000-4-5 IEC/EN 61000-4-6 IEC/EN 61000-4-8
Performance Standard	EN-IEC 62040-3	

© Rehlko 2026

2. General Description

2.1 Introduction

Congratulations on your purchase of the PW MF1500 DPA UPS.

Continuous power availability is essential in today's dynamic IT and process-related work environments. It is equally important that any installed power protection system is sufficiently resilient and adaptable to handle changes brought about by the introduction of new server technologies, migration and centralization.

Such demands are well met by the PW MF1500 DPA UPS system, which provides the foundation for continuous power availability of network-critical infrastructures both in enterprise data centres, where business continuity is of paramount importance, and in process control environments where manufacturing continuity is essential.

Reliability and quality standards

The PW MF1500 DPA UPS incorporates the latest technological developments in power engineering. Representing a completely new generation of transformerless high power three phase UPS systems, its advanced double conversion VFI (Voltage and Frequency Independent) topology responds fully to both the highest availability and environmentally friendly requirements compliant with IEC 62040-3 (VFI-SS-111) standards.

Rehlko specialises in the installation and maintenance of Uninterruptible Power Systems; and this powerful UPS is just one example of our wide range of state-of-the-art power protection devices that will provide your critical equipment with a steady and reliable power supply for many years.

Key features summary

High reliability, upgrade ability, low operating costs and excellent electrical performance are just some of the highlights of this advanced UPS system. Other key features include:

- *Decentralised Parallel Architecture (DPA)* – Each UPS module contains its own bypass circuit, which greatly improves the overall system reliability by removing a common point of failure that is often present in more traditional UPS systems.
- *Unity output power factor (kVA = kW)* – Blade server friendly. No de-rating required with leading PF loads.
- *Best in class AC-AC efficiency* – greater than 97% efficiency for all loads (with Xtra VFI function active) minimises operational costs (TCO).
- *Xtra VFI double conversion mode* – A complementary feature which enhances the double conversion efficiency of the UPS when load power is low compared to total UPS system capacity.
- *Low input power factor (0.99 @ 100% load)* – Cost savings during installation and the entire life cycle (TCO).
- *Ease of operation* – A graphical control panel on the distribution frame provides a single point of 'system level' control, and also allows the operation of each individual module to be interrogated.
- *Flexible battery management* – Advanced management of battery charging and preventive failure diagnostics avoids premature deterioration of battery life.
- *Top or bottom cable entry* – Allows flexible installation into existing plant infrastructure.

Very low input current distortion – An input current harmonic distortion of <3.0% @ 100% linear load leads to savings in generator-set power and installation costs.

© Rehlko 2026

2.2 Model range

PW MF1500 DPA 1000 kW Frame

The 1000 kW cabinet comprises a distribution frame and frames for four UPS modules. The distribution frame can be positioned on either the left or right of the UPS module frames but must be stipulated when placing an order.

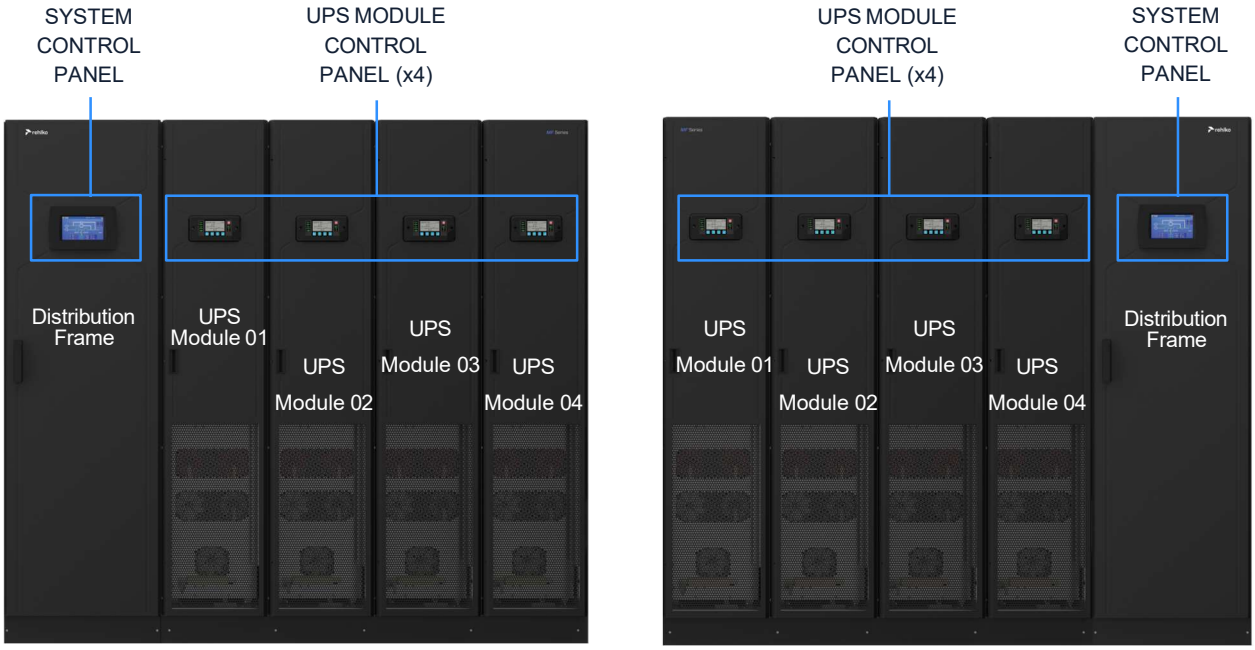

Figure 2.1 PW MF1500 DPA 1000 kW Frame

1000 kW Frame	1 Module	2 Module	3 Module	4 Module
System power rating (per cabinet) (kVA/kW)	250	500	750	1000
Maximum cabinet rating	1000 kVA / 1000 kW (up to 4 power modules)			
UPS type	On-Line, transformerless, Modular, DPA			
Parallel capability	Up to 4 Frames – 4 MVA / 4 MW			
Battery	Housed external to the UPS. Dimensions/weight/design is specific to application			
Performance specification	VFI-SS-111			
System cabinet dimensions (W x D x H) mm	2235 x 1000 x 2000			
Weight (without power modules) kg	550			
Weight (with power modules) kg	900	1250	1600	1950
UPS cabinet colour	RAL 9005 (Black)			
Ingress protection	IP 20			
Cable entry	Top or Bottom (To be defined at Order)			
Ventilation	Front to Top			
Service access	Front			
Installation clearances mm	Front 1555 mm, Top 500 mm, Rear 0 mm			
Heat dissipation - 1000 kW linear load (W)	35578			
Heat dissipation - 500 kW linear load (W)	13426			
Heat dissipation - 250 kW linear load (W)	7053			
Cooling airflow (m3/h) - EN 62040-1-1	7576			

© Rehlko 2026

PW MF1500 DPA 1500 kW Frame

The 1500 kW cabinet comprises a distribution frame and frames for six UPS modules. The distribution frame is positioned in the centre of the cabinet.

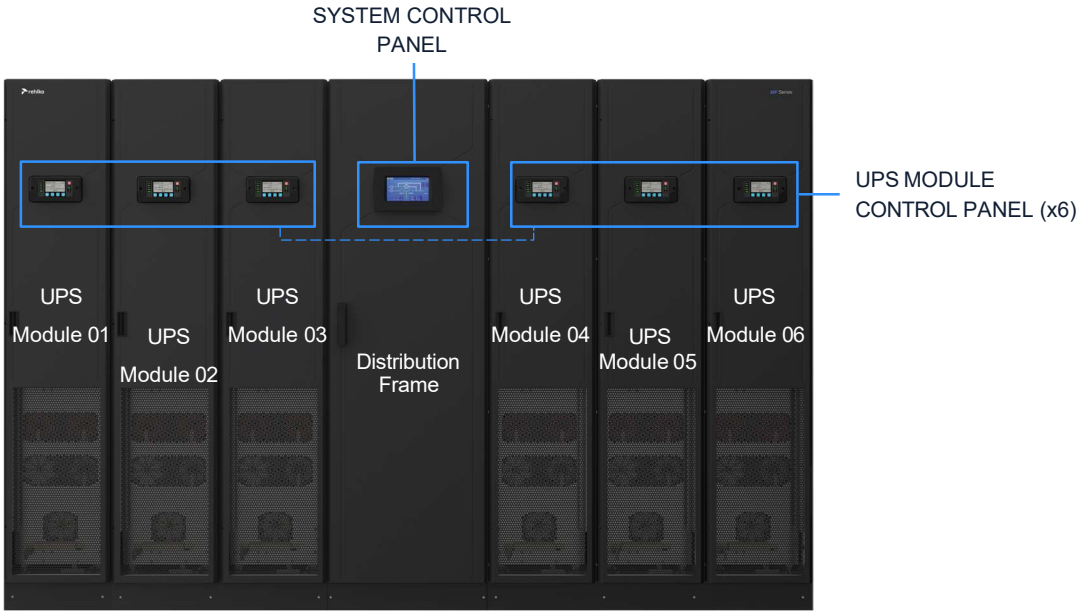

Figure 2.2 PW MF1500 DPA 1500 kW Frame

1500 kW Frame	1 Module	2 Module	3 Module	4 Module	5 Module	6 Module
System power rating (per cabinet) (kVA/kW)	250	500	750	1000	1250	1000
Maximum cabinet rating	1500 kVA / 1500 kW (up to 6 power modules)					
UPS type	On-Line, transformerless, Modular, DPA					
Parallel capability	Up to 6 Frames – 6 MVA/4 MW					
Battery	Housed external to the UPS. Dimensions/weight/design is specific to application					
Performance specification	VFI-SS-111					
System cabinet dimensions (W x D x H) mm	3045 x 1000 x 2000					
Weight (without power modules) kg	845					
Weight (with power modules) kg	1195	1545	1895	2245	2595	2945
UPS cabinet colour	RAL 9005 (Black)					
Ingress protection	IP 20					
Cable entry	Top or Bottom (To be defined at Order)					
Ventilation	Front to Top					
Service access	Front					
Installation clearances mm	Front 1555 mm, Top 500 mm, Rear 0 mm					
Heat dissipation - 1500 kW linear load (W)	53367					
Heat dissipation - 750 kW linear load (W)	20140					
Heat dissipation - 375 kW linear load (W)	10580					
Cooling airflow (m3/h) - EN 62040-1-1	11364					

© Rehlko 2026

2.2.1 Cabinet construction

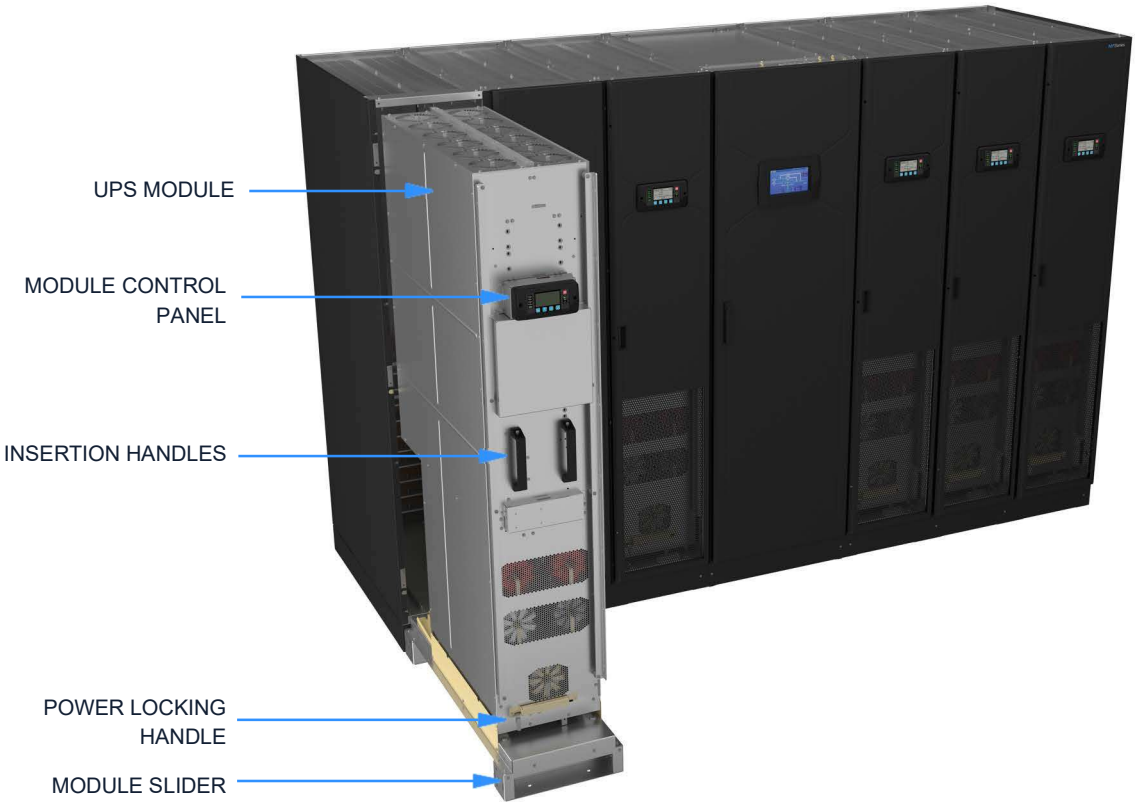

Figure 2.3 UPS module insertion

The system input, output and battery power cables are connected to busbars located in the ‘distribution frame’ which then run across the back of the cabinet to the module frames. The power cables can enter the distribution frame via cover plates fitted to the top and/or bottom of the frame which can be removed to fit suitable cable glands.

The UPS module is mounted on wheels and it is inserted into (or withdrawn from) the frame with the aid of a portable ‘slider’ which ensures that the module is correctly aligned to the frame. When fitted, the module locked in position by two shoot-bolts located near the insertion handles and secured to the front of the frame by eight screws.

Note: Figure 2.5 shows the correct positioning of the module slider, with the runners on the slider aligned with the internal runners on the bottom of the module frame.

The power locking handle located near the bottom of the module engages/disengages the module’s busbar power connections. The handle is locked into position by a yellow safety bar that must be lifted up to allow the power locking handle to be moved.

Figure 2.4 shows the power locking handle in the OFF (open) condition. In this state, the module power connectors are withdrawn into the back of the module and will not therefore connect power to the module.

In Figure 2.5 the handle is in the ON (closed) position, and shows that the power connectors are extended from the back of the module. In this case the connectors will plug into the busbars running across the back of the module frame to connect the module to the input mains, battery and UPS output power supplies connected in the distribution frame.

Key Point: When the power locking handle is engaged, the connections are sufficiently tight to prevent the module from being extracted from the frame.

ALWAYS ensure that the power locking handle is OFF (open) before you attempt to extract the module.

© Rehlko 2026

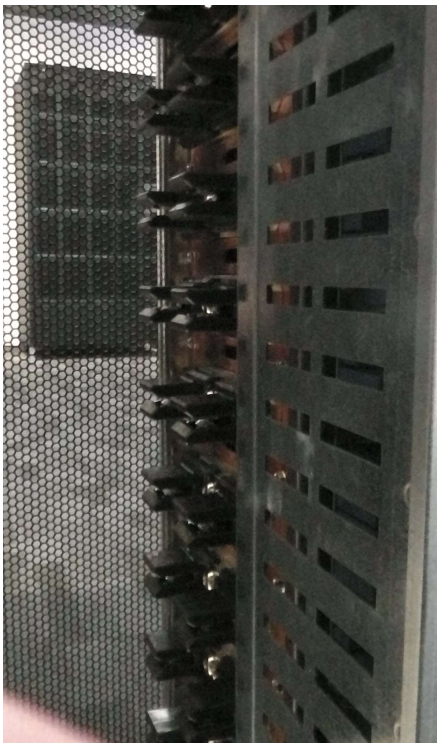

Figure 2.4 Power locking handle OFF (open)

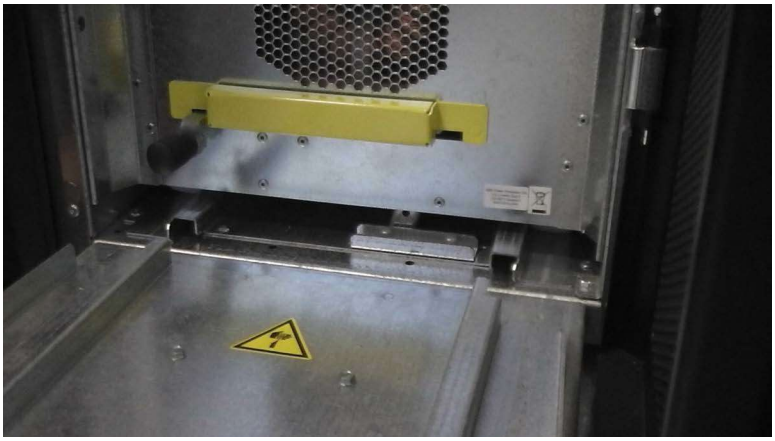

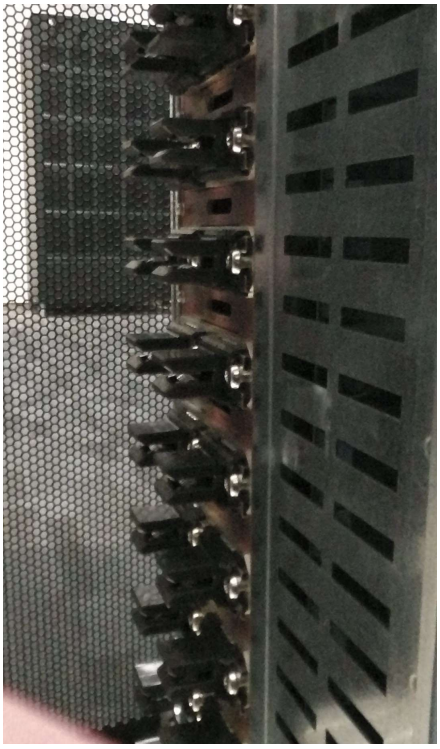

Figure 2.5 Power locking handle ON (closed)

© Rehlko 2026

2.2.2 System expansion and parallel cabinets

Some UPS applications initially present a low power requirement which increases over time as the application grows. It is therefore essential that an installed UPS system can be expanded to meet a growing load demand without compromising the existing load. The Distributed Parallel Architecture (DPA) design of the PW MF1500 DPA satisfies this requirement with ease.

An PW MF1500 DPA system can operate with fewer than the full complement of UPS modules installed. For example, a 6-module (1500 kW) cabinet might initially have only four modules fitted to cater for a load of up to 1000 kW then a fifth, and sixth, module can be added at a later date to cater for an increased load capacity of up to 1500 kW. In this situation, the additional module(s) can be installed without needing to shut down the system or transfer the load to the bypass supply.

This 'hot-swappable' design similarly allows a UPS module to be exchanged during system operation without disrupting the load supply – but of course this depends on the system redundancy and prevailing load demand at the time that the change is taking place.

For installations where the load demand is greater than 1500 kW, up to four PW MF1500 DPA cabinets can be connected in parallel to provide a system capacity of up to 6.0 MW. When two (or more) cabinets are connected together the parallel communication bus is expanded to include both cabinets, thus the UPS modules within both cabinets effectively operate in parallel – for example, a system comprising three fully populated PW MF1500 DPA cabinets will contain 18 fully paralleled 250 kW UPS modules with a system capacity of 4500 kW.

If an existing installation requires an additional PW MF1500 DPA cabinet to be installed to expand the system, the existing system will have to be shut down or externally bypassed while the additional cabinet is being electrically connected.

Key Point: It is not necessary to fully populate one cabinet with UPS modules before installing the next cabinet. For example, if it is known at the planning stage that the eventual system load is likely to reach 4500 KW it makes good design sense to install and cable-up three PW MF1500 DPA cabinets and distribute the initial number of required modules between them, then add further modules as the demand increases.

The system ratings for different PW MF1500 DPA parallel cabinet combinations are shown in the table below.

Four module cabinet

Parallel cabinet system output (kW)	1 Cab	2 Cab	3 Cab	4 Cab
1 module fitted	250	500	750	1000
2 module fitted	500	1000	1500	2000
3 module fitted	750	1500	2250	3000
4 module fitted	1000	2000	3000	4000

Six module cabinet

Parallel cabinet system output (kW)	1 Cab	2 Cab	3 Cab	4 Cab
1 module fitted	250	500	750	1000
2 module fitted	500	1000	1500	2000
3 module fitted	750	1500	2250	3000
4 module fitted	1000	2000	3000	4000
5 module fitted	1250	2500	3750	5000
6 module fitted	1500	3000	4500	6000

© Rehlko 2026

2.3 Parallel module operation

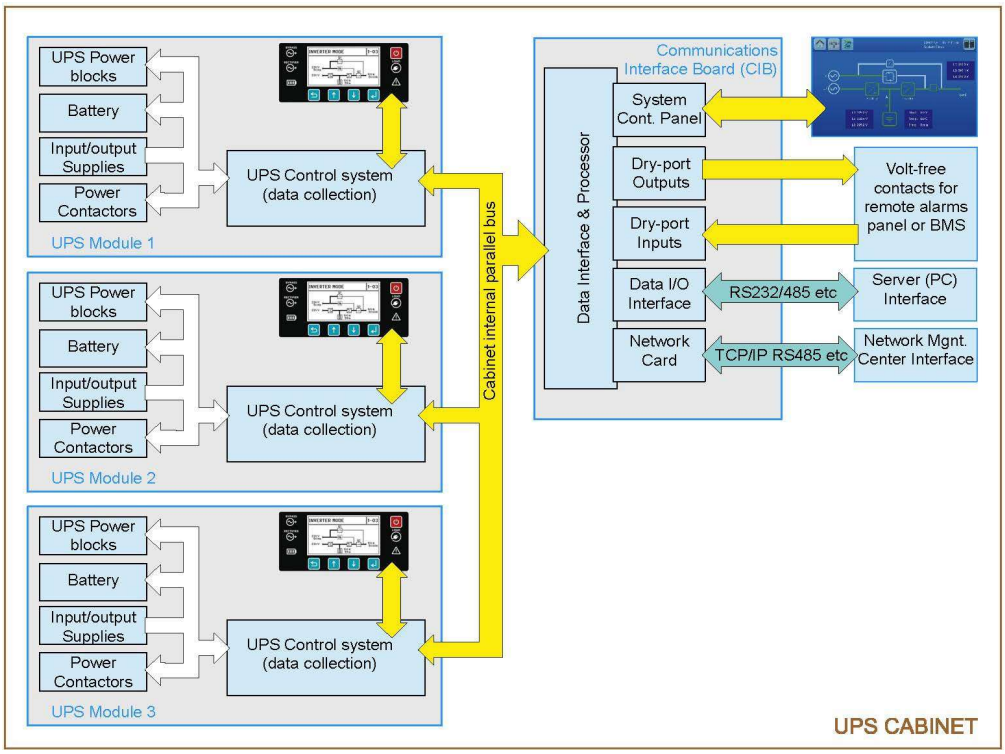

Figure 2.6 Parallel module operation

2.3.1 Parallel control in a single cabinet

As the power output of all the modules fitted in the UPS cabinet are connected in parallel, an ‘inter-module’ control system is required to:

- ensure that the UPS modules equally share the load current.
- ensure that the UPS modules are always synchronised to each other – and to the bypass supply (when present).
- synchronise the inverter/bypass load transfer operation such that, for example, if the operator selects ‘bypass mode’ the static switch in ALL the modules change over in unison.

These inter-module control functions are achieved using an ‘internal parallel control bus’ to pass the necessary control signals between the UPS control system of each module – this is depicted in Figure 2.6 for a 3-module system.

The parallel control mechanism operates on a master/slave relationship with one module acting as the ‘master’ module and the remaining modules as ‘slaves.’ If the ‘master’ module is turned off, or shuts down for any reason, the next module in the chain hierarchy automatically takes over the ‘master’ role. The master/slave hierarchy is set during system commissioning and the left-most module in the cabinet (module ID P01) is usually designated as the ‘master.’

The internal parallel bus is also connected to the communications interface board in the distribution frame from where it is interfaced with the system control panel. This allows the system control panel to receive and display data from each module individually or send a common control signal, such as load transfer commands, to every module simultaneously.

The communications interface board also has the means of interfacing various module/system monitoring and control functions with a range of external devices – *(see "Communications interface," on page 88)*.

2.3.2 Control in a parallel-cabinet system

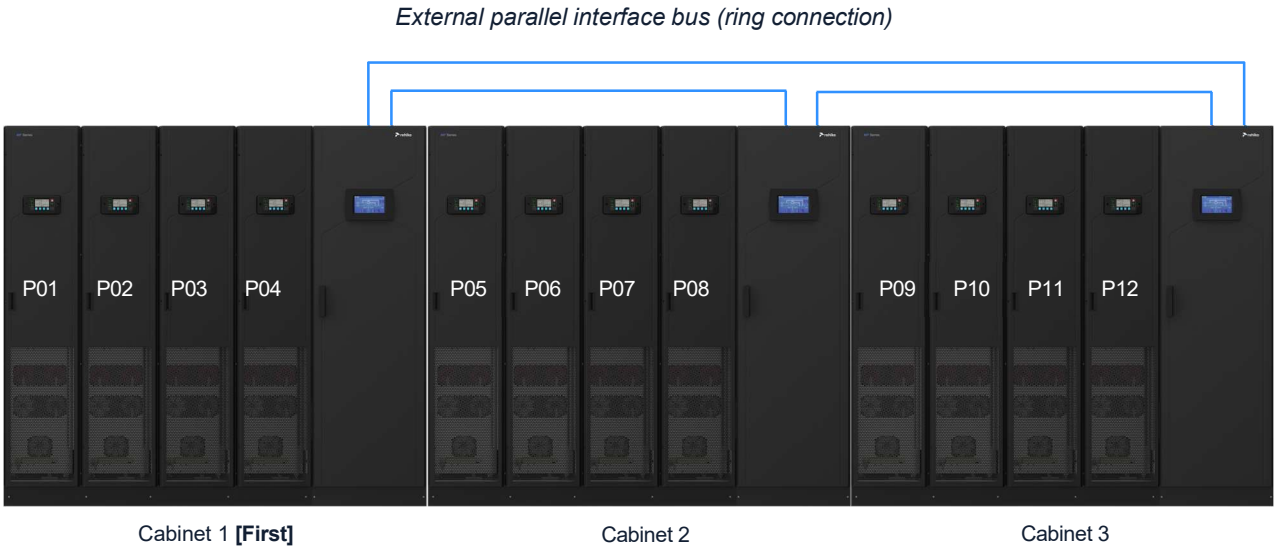

Figure 2.7 Parallel cabinet system

A parallel-cabinet system requires the same inter-module parallel control mechanisms as that just described for a single cabinet installation. This is achieved by breaking into the internal parallel bus in each cabinet and connecting an external parallel bus, as illustrated in Figure 2.7. A simplified block diagram of the inter-cabinet parallel bus connections is shown in Figure 9.3 on page 89.

In practice the external parallel bus is implemented by connecting cables to the parallel interface board (PIB) within the cabinets' distribution frames in a ring configuration – i.e. the PIB 'input' connection in one cabinet is connected to the 'output' connection on the PIB in the adjacent cabinet. The ring-bus configuration eliminates a single point of failure. *(see paragraph 9.4 on page 97)*.

In a parallel-cabinet installation the cabinets are assigned a hierarchical ID in much the same way as the UPS modules are assigned a master/slave ID. The cabinet that contains the 'master' UPS module is normally set as the 'first' cabinet.

The illustration in Figure 2.7 shows cabinet 1 as the 'first' cabinet and the modules identified as P01 to P12. This is how the modules are identified on the system control panel – for example to identify a faulty module, or when inspecting a selected module's operating parameters. The cabinet and modules' ID is set be the commissioning engineer.

2.3.3 'Capacity' v 'Redundancy' parallel UPS systems

If all the UPS modules connected as a parallel system are required to be operational in order to supply the full system load it can be described as a 'capacity' system. In this type of system if one module is turned off or trips off-line due to a fault condition then the remaining online modules will be insufficient to continue to supply the load and the load will be transferred to the bypass supply automatically.

A UPS system that is designed with inbuilt module redundancy contains at least one module more than is necessary to supply the projected full load. During normal operation all the modules will be turned on and equally share the load current, but if one module should fail the remaining online modules are capable of maintaining the full load supply and the system will continue to provide uninterrupted load power. A redundant module system is often described as operating as an (N+x), where x equates to the number of redundant modules – e.g. an (N+1) system has a module redundancy of 1.

In practice, a system's redundancy measure is entirely load dependent rather than being a pre-programmed number. For example; an PW MF1500 DPA cabinet that is fully populated with 6 UPS modules would present a capacity system for a load between 1250 kW and 1500 kW whereas it would operate as an (N+1) redundant system for loads between 1000 kW and 1250 kW. Below 1250 kW it would present (N+2) system... and so on.

Clearly, the ability to lose one (or more) UPS module yet still supply the rated load with processed, backed-up power significantly increases the overall system reliability; therefore it is common practice to plan inbuilt module redundancy for modern-day UPS installations.

© Rehlko 2026

2.4 Functional description of operation

This section contains:

- a functional description of the PW MF1500 DPA at block-diagram level *(see paragraph 2.4.1)*
- a description of the UPS module operating modes *(see paragraph 2.4.2)*
- a description of the UPS system operational modes – 'On-line' versus 'Off-line' operation *(see paragraph 2.4.3)*

2.4.1 PW MF1500 DPA module block diagram

Figure 2.8 illustrates an internal block diagram of a single UPS module inserted into the PW MF1500 DPA cabinet rack. As shown, the module plugs into heavy duty connectors that carry the input mains, battery and UPS output supplies. Note that these supplies are switched by contactors within the UPS module but there are no 'system' power isolators contained within the cabinet's distribution frame. It is therefore essential that these input/output supplies are connected via suitably rated external protective devices (see the Specification chapter for details).

CAUTION: *As the mains power supplies are unswitched within the UPS cabinet, the UPS module will be live at all times unless the input main supply is externally isolated at the incoming mains switchboard.*

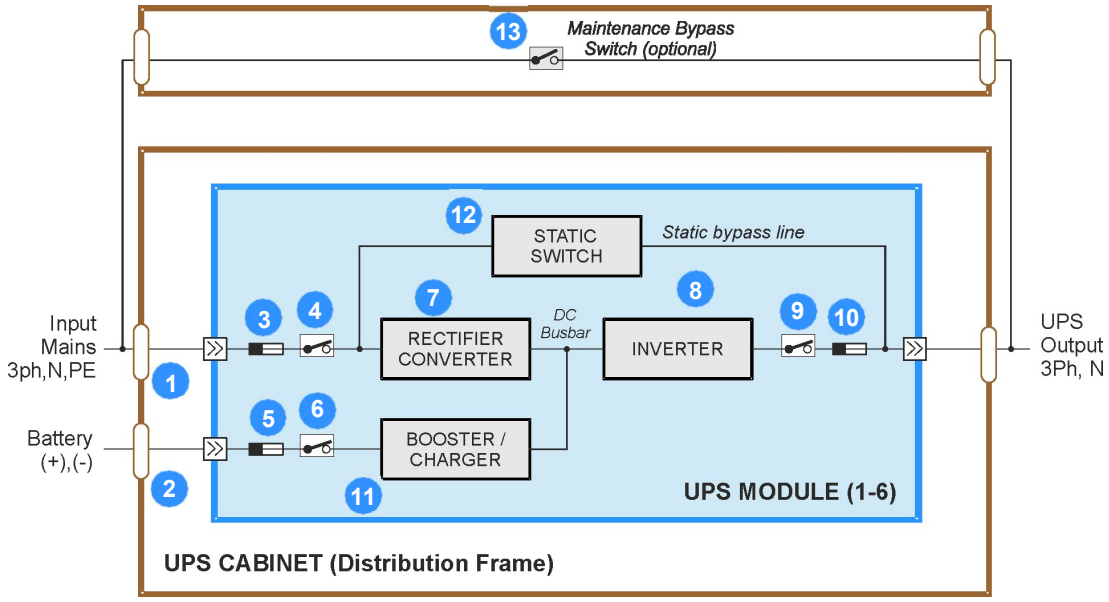

Figure 2.8 PW MF1500 DPA module

Input power connection (1)

The UPS requires a 4-wire (3ph + N) mains feed connected to the input mains busbars in the cabinet's distribution frame. Within the UPS module the input mains supply is connected to the rectifier/converter and static switch power blocks via an input fuse (3) and input relay (4) which is energised by the module's control electronics.

Battery connections (2)

External batteries are connected to battery busbars located in the distribution frame. These busbars can be configured to present a 'separate' battery configuration, which provides an individual battery system for each UPS module, or a 'common' battery configuration in which a single battery system is shared by the modules in the cabinet.

Within the UPS module, the battery is connected to the battery booster/charger power block via a battery fuse (5) and contactor (6) which is energised by the module's control electronics.

© Rehlko 2026

Note that regardless of the type of installation the battery system will usually comprise several battery strings connected in parallel to provide the required battery capacity.

Key Point: Battery configuration

A standard cabinet is configured for a 'separate battery' system. If a 'common battery' configuration is required it must be specified when placing an order for the cabinet.

Rectifier Converter (7)

The rectifier converts the incoming mains supply into a well regulated DC busbar which provides the input power source for the inverter and battery booster/charger blocks. The specialised switched-mode DC booster techniques used to control this the rectifier/converter results in an input power factor of almost unity over its entire operating range (pf=0.99 at 100% linear load).

Inverter (8)

The inverter converts the DC busbar voltage produced by the rectifier (or the battery via the booster/charger) into a three phase AC voltage that is suitable to power the load connected to the UPS output. The inverter control system regulates the output voltage and frequency and provides various levels of overload protection, frequency synchronisation, load sharing and output voltage error detection.

The inverter is connected to the UPS output via an output relay (9) (one per phase), which is energised by the module's control electronics, and an output fuse (10). The output relay isolates the inverter from the module's output when the inverter is inoperative or when the load is connected to the static bypass line.

Battery booster/charger (11)

The battery booster/charger power block has bi-directional functions. When the input mains supply is available, and the rectifier is turned on, it acts as a multi-stage battery charger which uses an intelligent charging profile to optimise the battery life and ensure the battery recharges quickly following a deep discharge cycle.

If the input mains supply fails, or the rectifier is unable to provide a sufficient output to sustain the prevailing inverter load, the battery is called upon to provide the inverter's DC input power source. Under these circumstances the booster/charger changes to its 'boost' mode to provide a well regulated DC busbar voltage as the battery discharges.

Static switch (12)

The static switch provides a means of connecting the UPS output directly to the input mains supply, bypassing the rectifier and inverter power blocks. This provides an alternative UPS output power source if the inverter is unavailable, or overloaded. The electronic control mechanism that transfers the UPS output between the static switch and inverter ensures that the two power sources are mutually exclusive – i.e. when transferring the load to 'bypass' the inverter is switched OFF at the same time as the static switch is turned ON, and vice-versa.

Note: A brief load break will occur if transferring from bypass to inverter following a bypass supply failure. (See 'Off Line Mode' in paragraph 2.4.3).

Maintenance bypass (13)

The maintenance bypass switch shown in Figure 2.8 is an optional, but widely used, external wrap-around facility that enables the load to be connected to a raw mains supply while the entire PW MF1500 DPA cabinet is powered down. The Maintenance Bypass facility is bespoke but a suitable solution can be provided by Rehlko.

A typical UPS installation incorporating an external maintenance bypass facility is described on Page 42.

Key Point: Internal fuses

The UPS module contains several internal fuses, as shown. These fuses are not accessible to the operator and in the event of a fuse failure the module must be removed from the cabinet and repaired by an authorised service agent.

2.4.2 UPS Module operating modes

This sections uses simplified block diagrams to illustrate the three main UPS module operating modes. Note that the module internal fuses and some contactors have been omitted for reason of clarity, however the inverter output relay remains shown.

Load on inverter

This is the only operating mode that provides the load with continuously processed and backed-up power, and in the vast majority of installations can be considered as being the 'normal' operating mode.

In this mode, the rectifier converts the input mains into a well regulated DC supply at the DC busbar which is then converted back to AC by the inverter to provide the UPS output.

The inverter frequency is synchronised to the input mains supply so that the load can be transferred to the static bypass line without a load-break if needed. If the input mains frequency goes outside a preset window the inverter will abort its frequency synchronisation and its output frequency will be controlled by a free-running oscillator which produces a constant 50/60 Hz UPS output.

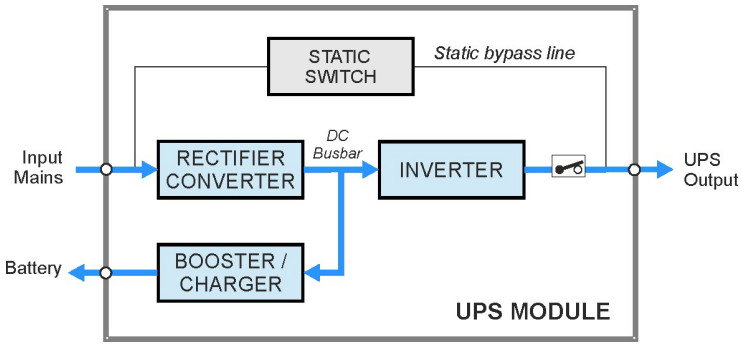

Figure 2.9 Load on inverter

In this mode, the battery booster/charger power block operates in its 'charger' mode and converts the DC busbar voltage to the regulated voltage demanded by the intelligent battery charger control mechanism.

Load on battery

If the mains supply fails, the rectifier will shut down and the battery will provide the power source for the DC busbar via the booster section of the battery booster/charger. The booster maintains a regulated voltage on the DC busbar as the battery discharges in order to provide the inverter with a stable DC input power source.

As this mode is normally associated with an input mains failure condition, the inverter frequency control will revert to a free-running oscillator and provide a constant 50/60 Hz UPS output.

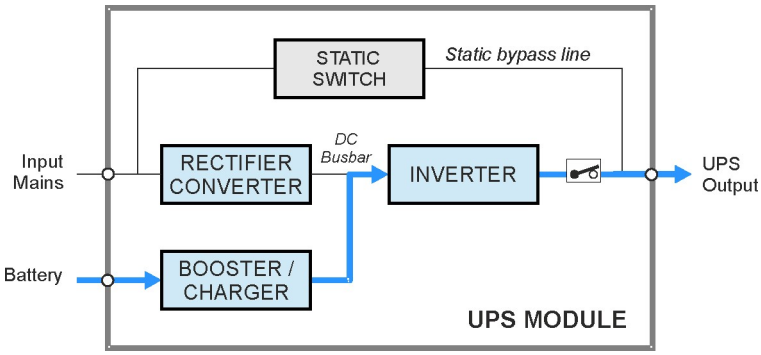

Figure 2.10 Load on battery

Battery discharge operation

When the battery is placed on load, and begins to discharge, the module control panel `BATTERY` LED flashes green accompanied by an audible alarm. The LED will continue flashing green until the battery discharges to a preset low voltage threshold, at which point it changes to yellow. The remaining battery charge (%) and autonomy time (m) is shown on the module control panel LCD screen to allow the operator to gauge the appropriate time to shut down the load in an orderly manner, if necessary, before the battery becomes fully discharged and the UPS drops its output supply. Various optional software-controlled shutdown applications are available to automate the load shut down process.

The initial 'battery' audible alarm can be cancelled but it will reappear when the battery voltage falls to its low battery threshold, whereupon the audible alarm will sound once again to warn the operator that the battery is nearing its end-of-discharge.

© Rehlko 2026

Load on bypass

In the 'load on bypass' mode the inverter is turned off and the static switch connects the load to the unprotected static bypass line.

This mode can be selected manually (see 'ECO Mode' below) or entered as the result of a UPS fault, or overload, condition which transfers the load from inverter to bypass because the inverter is unable to support it.

Depending on the reason for entering the 'load on bypass' mode, the rectifier and charger sections might turn off entirely or remain operational and continue to provide battery charging (as shown in this illustration).

Similarly, the inverter may be operating on stand-by (see 'ECO Mode' below), manually turned OFF or shut down due to a fault.

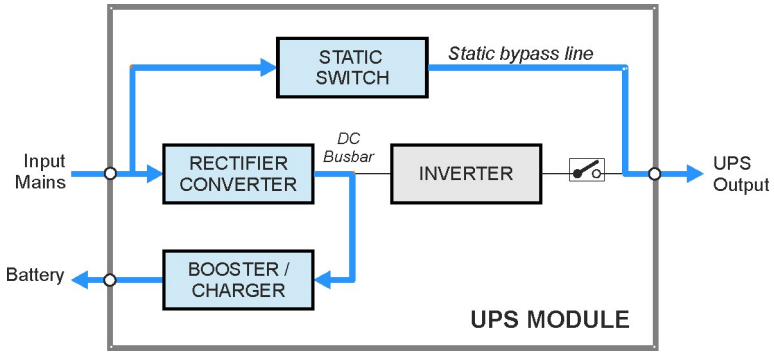

Figure 2.11 Load on bypass

Key Point: In a parallel module system all the modules must operate in the same output mode – i.e. it is not possible for one module to operate 'on-bypass' while the other(s) operate 'on-inverter' (or vice versa). A parallel system control signal passing between the modules prevents this from occurring such that, for example, if one module is selected to transfer the load to the static bypass then the transfer signal is applied to every module.

Load on Maintenance bypass

This mode, which connect the load to a raw AC mains bypass supply, requires an optional external maintenance bypass switch *(see Figure 2.8)* and is normally used only if the entire UPS system is being shut-down for major repair or system expansion. It can be used as part of the operating procedure when starting the system from a fully powered-down condition – see the operating procedures for detailed instructions.

2.4.3 UPS System operating modes

Section 2.4.2 described the three main operating modes for an individual UPS module: but UPS systems are also categorised according to the way in which they operate at a 'system' level, and are typically described as being either an 'on-line', or 'off-line' ('line interactive') system. An PW MF1500 DPA system can be operated in either of these categories.

ON-LINE UPS system

An on-line UPS system provides the highest degree of load protection and is recommended if the critical load cannot tolerate even a very brief supply interruption.

When operating as an on-line system, the UPS module(s) normally operate in the 'on inverter' mode (Figure 2.9), and will switch to the 'on battery' mode if the input mains supply fails or the rectifier shuts down (Figure 2.10). The changeover to battery operation is totally transparent at the UPS output. An audible/visual alarm alerts the operator that the battery is discharging in order to allow him to undertake any intervention to safeguard the load integrity if necessary.

When operating 'on battery,' the UPS system will continue to provide its rated output until the battery discharges to a low cut-off point at which time it will attempt to switch to its 'on bypass' mode (Figure 2.11), but if the input mains supply is unavailable the UPS will totally shut down in a controlled manner.

Standby generator

Some UPS installations include a standby generator that starts automatically following the loss of the UPS input mains supply to provide the UPS with an alternative input power source. Where such an alternative input supply is available, the batteries will only discharge for a short period following an input mains failure before the generator comes on line. In practice, operating on generator not only avoids the UPS eventually shutting down due to a fully discharged battery but also helps maximise the battery life by reducing the battery discharge time.

© Rehlko 2026

Inverter fault

If a UPS module experiences an internal fault (or is turned off) while it is operating ‘on inverter,’ its inverter output relays will open.

The system response will depend on the prevailing system redundancy. If the number of ‘healthy’ modules remaining connected to the system is sufficient to power the applied load demand then the system will continue to operate in the ‘on inverter’ mode, and the failed module will not affect on the UPS system output: but if the applied load demand exceeds the remaining system capacity the system will transfer the load to the static bypass supply (‘on bypass’).

Inverter overload

The inverter is designed to sustain an overload based on an inverse load/time characteristic (see the Specification chapter for details). If the designed overload parameters are exceeded the load is transferred from the inverter to the static bypass, whereby the additional power available from the bypass supply will usually clear the protective devices in the overloaded circuit. If the overload condition clears while operating ‘on bypass’ the load is re-transferred back to the inverter and the UPS returns to its normal ‘on inverter’ operation. If the overload persists while operating ‘on-bypass’ it will ultimately rupture the UPS input mains supply fuses.

OFF-LINE (On stand-by) UPS system operation

When the PW MF1500 DPA is used as an off-line UPS system, the UPS modules are normally operated in their ‘on bypass’ mode (Figure 2.11); however, the rectifier and battery charger remain powered up to maintain battery charging, and the inverter is turned on but operating on standby.

If the bypass (input mains) supply fails, the inverter is immediately brought on line and the load transferred from the static bypass to the inverter within 3 to 5 milliseconds. However, as the UPS bypass and input mains are connected to a common supply, the modules will immediately sense a mains failure and revert to the ‘on battery’ mode (Figure 2.10).

If a standby generator is included in the system (as described earlier) the load will re-transfer (without a load break) from the inverter to the static bypass line automatically when the generator is started, and the inverter will return to standby.

CAUTION: *if the bypass (input mains) supply is unavailable (either from the utility supply or standby generator) when the system is operating ‘on-inverter,’ the bypass is unable to take over the load supply if the inverter fails, or assist the inverter to handle an output overload. It is therefore important that the cause of any load transfer from bypass to inverter is quickly rectified.*

WARNING: The ON LINE mode should always be used for critical load protection.

The off-line mode is sometimes referred to as the “ECO” (economy) mode as it is slightly more energy efficient than the on-line mode due to the reduced rectifier and inverter losses during normal system operation. However, this mode is recommended only if the connected load equipment can tolerate a power interruption of up to 3~5 ms during the load transfer period.

2.4.4. Xtra VFI

Most parallel-module UPS installations are designed to operate with inbuilt (N+1) module redundancy: and in such a system an individual UPS module is therefore rarely called upon to operate at its full capacity. For example, if an installation uses a 6-Module PW MF1500 DPA system (1500 kW) to feed a planned 1250 kW load, each module will provide 208 kW (83% of its rated capacity) at full load.

As a result, a modern UPS module that is intended to operate in a (N+1) environment is designed so that its greatest efficiency is obtained across it’s mid operating range (Figure 2.12) rather than at its maximum rated output, as was previously the case.

The graph in Figure 2.12 shows the efficiency of a parallel-module PW MF1500 DPA UPS system against a connected load ranging from 10% to 100%. It shows that for loads between approximately 85% down to 20% the system efficiency remains above 97.25%, with peak system efficiency achieved between 65% - 25%. The graph also shows that when the system is operated in standard (non Xtra VFI) mode the system efficiency tails off quite dramatically below about 20% load. This reduced system efficiency at low load represents wasted energy and expense.

© Rehlko 2026

The situation is alleviated by the ‘Xtra VFI’ feature which dynamically controls the number of online modules such that the effective load on each module falls within the range of 25% to 75%.

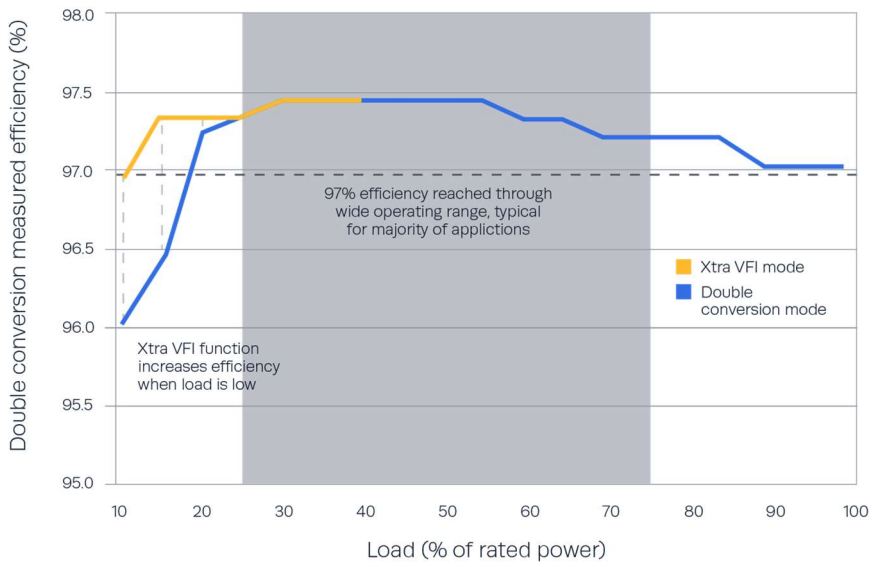

Figure 2.12 Xtra VFI curves

For example; if the load connected to the system reduces to the point where the individual modules are loaded to less than 25% the Xtra VFI feature switches surplus modules to a ‘standby’ mode, which then increases the load on the remaining modules to a level that increases their operating efficiency.

When a module is switched to ‘standby’ it's inverter is turned off but the rectifier remains active to sustain battery charging and the inverter can be restarted and brought back on line within 40~50ms if the system load increases. The overall effect of Xtra VFI can improve the system efficiency by up to 1% at very light loads, as shown.

Note: The selected standby modules are rotated on a weekly basis so that all modules are ‘aged’ equally.

Implementation

The ‘Xtra VFI’ feature is inbuilt to all PW MF1500 DPA UPS systems but its use is optional and it can be turned OFF/ON from the system control panel as required by the operator. However, the ‘Xtra VFI’ operating parameters and activation are configured via a password-protected area of the system control panel which is only accessible to an authorised user or a Rehlko trained engineer. Once set, the ‘Xtra VFI’ configuration will not require further attention unless there is a significant change in load usage.

When configuring the ‘Xtra VFI’ operation, the commissioning engineer will enter parameters concerning the system redundancy (i.e. the number of redundant modules) and the anticipated highest step load (HSL) that is likely to be encountered during normal system operation.

Using these two set parameters, ‘Xtra VFI’ can then dynamically calculate the number of active modules required to power the prevailing load demand.

Key Point: The highest load step (HLS) equates to the highest load increase that can be expected to be applied to the system in less than 50 ms that the UPS is expected to handle without any compromise. When the load step is applied, ‘Xtra VFI’ will turn ON standby module(s) within 50 ms to increase the number of active modules to that which is necessary to support the increased load.

Examples

Consider a 6x 250 kW module system (1500 kW capacity):

Conditions	# Active modules	Comments
Load = 500 kW Redundancy = 1 module HSL (and below) = 100 kW	3 (750 kW capacity)	3 modules can be used for 500 kW (N+1). The redundant module provides a sufficient headroom to handle the 100 kW HSL when required.
Load = 500 kW Redundancy = 1 module HSL (and Below) = 300 kW	4 (1000 kW capacity)	3 modules can be used for 500 kW (N+1). But in this example the redundant module does not provide a sufficient headroom to handle the 300 kW HSL, therefore two additional active modules are needed.

Note that in the event of an input mains failure or a fault on *any module* in the system, whether the module is active or on standby, 'Xtra VFI' will immediately activate ALL modules until the input supply returns or the alarms on the faulty module are accepted.

An Xtra VFI status bar screen on the system control panel graphically indicates:

- Load:
  the existing load demand
- Active:
  the free capacity immediately available from the active modules due to the programmed HLS or redundancy configuration
- Standby:
  the power available from those modules currently running on standby that can be called upon when needed

Figure 2.13 Xtra VFI Status bar screen

The operator can also access a screen on the system control panel which shows the Xtra VFI module activity *(see Figure 2.14)*. This screen identifies the currently active modules (green) and standby modules (blue).

Figure 2.14 Xtra VFI Active modules

2.5 Module Control Panel

A module control panel is fitted to the front of each UPS module. It allows the module to be individually controlled and monitored, and comprises an ON/OFF button, LED status indicators, LCD display and control/navigation buttons.

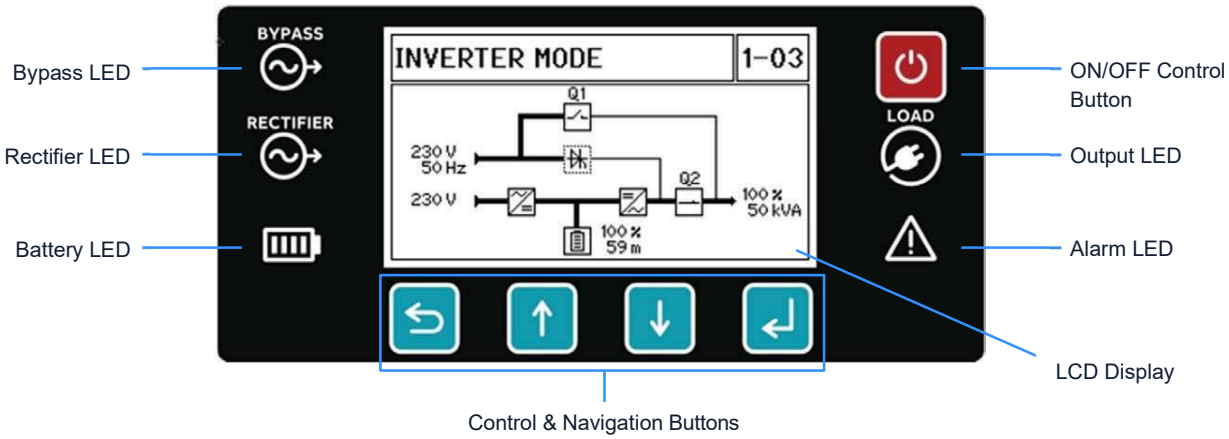

Figure 2.15 Module Control Panel

2.5.1 ON/OFF button

The UPS module can be started and stopped by pressing the ON/OFF button:

Function	Action
Start-up	Press the ON/OFF button – the UPS module will start once the request is confirmed by pressing the Enter button
Shut-down	Press the ON/OFF button for 3 seconds – the UPS module will shut down once the request is confirmed by pressing the Enter button

2.5.2 LED indicators

The LEDs indicators on the left and right side of the module control panel change colour to indicate the status of key parameters. They remain active when the LCD display is in its screensaver mode:.

LED	Colour	Interpretation
BYPASS LED	GREEN RED	Bypass mains is available with valid voltage/frequency Bypass mains is unavailable or its voltage/frequency is invalid
RECTIFIER LED	GREEN RED	Rectifier (input) mains is available with valid voltage/frequency Rectifier (input) mains is unavailable or its voltage/frequency is invalid
BATTERY LED	GREEN RED YELLOW	Steady – Battery is connected and charged Flashing – Battery is discharging (on-battery mode, or during battery test) Steady – Battery Failure, high voltage/temperature, failed battery test Flashing – battery is not detected, or disconnected Battery voltage is low, battery is discharged
OUTPUT LED	GREEN YELLOW BLUE RED OFF	UPS module output is being supplied by the inverter UPS module output is being supplied by the bypass UPS module is in standby mode (XTRA-VFI status) UPS module output voltage/frequency is out of tolerance UPS module is OFF
ALARM LED	OFF YELLOW RED	No active event/alarms pending Events pending An alarm condition is present

© Rehlko 2026

2.5.3 LCD Display

During normal operation the module control panel LCD display appears as shown in Figure 2.16. The screen enters a screensaver mode and turns OFF after 5 minutes of control button inactivity. Screensaver mode is deactivated when any control button is pressed or an alarm is activated.

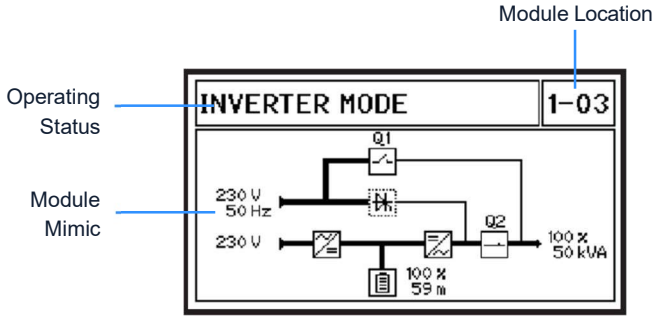

Figure 2.16 Module control panel LCD

Operating status

Indicates the UPS module current operating status:

- MODULE OFF
- MODULE DISCONNECTED
- INVERTER MODE
- BYPASS MODE
- BATTERY MODE
- STAND-BY MODE

Module location (ID)

This number indicates the position of the UPS module within the overall UPS system and is allocated by the service engineer when the UPS system is commissioned or a new UPS module is installed. The first number refers to the cabinet number (1-5) and the second number indicates the position of the module within the cabinet – e.g. the example shown in Figure 2.16 refers cabinet 1 module 3.

Note that the modules are usually numbered from left to right. In a multi-cabinet system the modules are incremented across the cabinets – i.e. the ID of the modules in cabinet 1 are 1-01 to 1-06, cabinet 2 modules are identified as 2-07 to 2-12, cabinet three are 3-13 to 3-18 and so on.

The module location number is used by the fault detection and event history functions to identify a particular module.

Module mimic

The LCD module mimic shows the active power path through the UPS. It also provides:

- metering of the input and bypass mains voltage and frequency
- metering of the output load (percentage and kVA)
- an indication of % battery charge and estimated autonomy time for the applied load. Note that the number of illuminated bars in the LCD battery icon also provides a quick indication of the state of battery charge.

2.5.4 Control Buttons

The control buttons are used to access and navigate the module control and monitoring menu system shown in Figure 2.15:

BACK UP DOWN ENTER

Figure 2.17 Module control panel buttons

BACK button

- Scroll back to top-level menu
- Cancel any setting back to the previous value
- Cancel the audible alarm

UP button –

- Scroll up the sub-menu or setting/parameter
- Increment the value or setting of a parameter
- Decrement the value or setting of a parameter

DOWN button

- Scroll down the sub-menu or setting/parameter
- Decrement the value or setting of a parameter

ENTER button

- Enter a selected sub-menu
- Confirm the value of a setting or selected parameter

© Rehlko 2026

2.5.5 Module control panel menu configuration

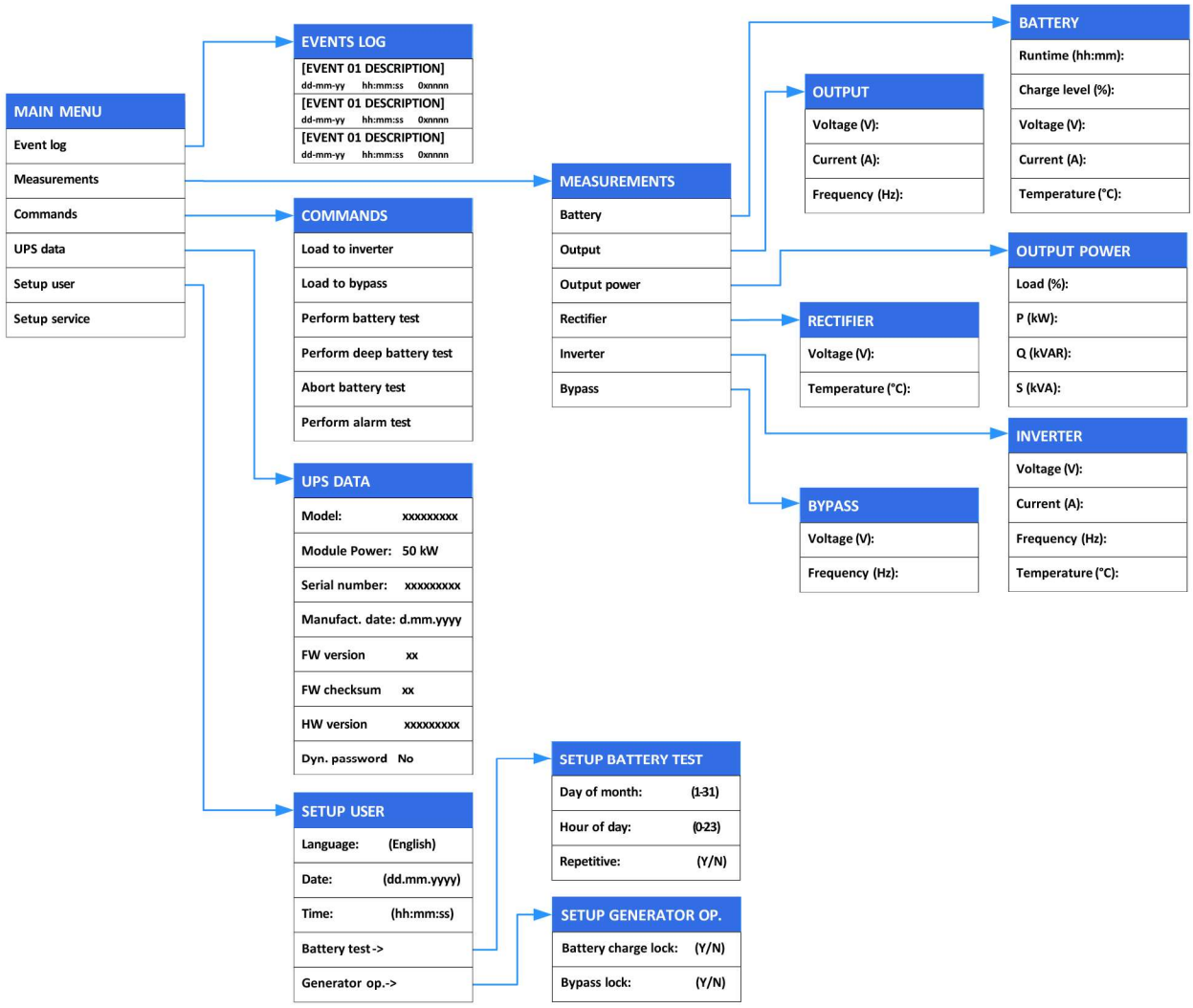

Figure 2.18 Module control panel menus

MAIN MENU

The following sub-menus can be accessed from the MAIN MENU:

EVENTS LOG – The event log stores the last 100 UPS alerts/events in date/time stamp order. These include both 'fault' events, such as [`Overload`], and 'operational' events such as [`Load to bypass`].

MEASUREMENTS – This sub menu provides metering access of the monitored output, rectifier, bypass, battery and inverter parameters.

COMMANDS – This sub menu provides access to a range of commands that might be used during day-to-day UPS operation. Those most commonly accessed are the [`Load to inverter`] and [`Load to bypass`] commands which are used to transfer the load between inverter and bypass during the UPS start-up and shut down procedures.

> [`Perform battery test`] stops the battery charger and monitors the off-load battery voltage for 1 minute then transfers the load to battery for a further minute.
>
> [`Perform deep battery test`] as above, but runs with the battery on load until the 'low battery alarm' activates.
>
> [`Abort battery test`] stops the battery test in progress.

[Perform alarm test] activates the 'common' alarm. Used mainly during commissioning to check the alarm interface with an external alarm panel or BMS system. The alarm will automatically clear after five minutes.

UPS DATA – This is a read-only menu and shows the UPS build and revision details input by the manufacturer/ commissioning engineer.

SETUP USER – This sub menu allows the LCD display language to be selected and the local date/time to be set. The date/time is used by the automated battery test feature and to stamp the Event Log entries. The SETUP USER sub menu also provides access to two further menus:

SETUP BATTERY TEST – allows the operator to configure a (timed) battery test schedule. This can be for a single or repetitive battery test event.

SETUP GENERATOR OP. – allows the operator to configure aspects of the UPS operation when it is being powered from a standby generator – i.e. Disable battery charging and transfer to bypass.

SET-UP SERVICE – This menu, which is password-protected to restrict access, is used by the commissioning engineer to configure some UPS characteristics using approved software.

2.6 UPS Communication facilities

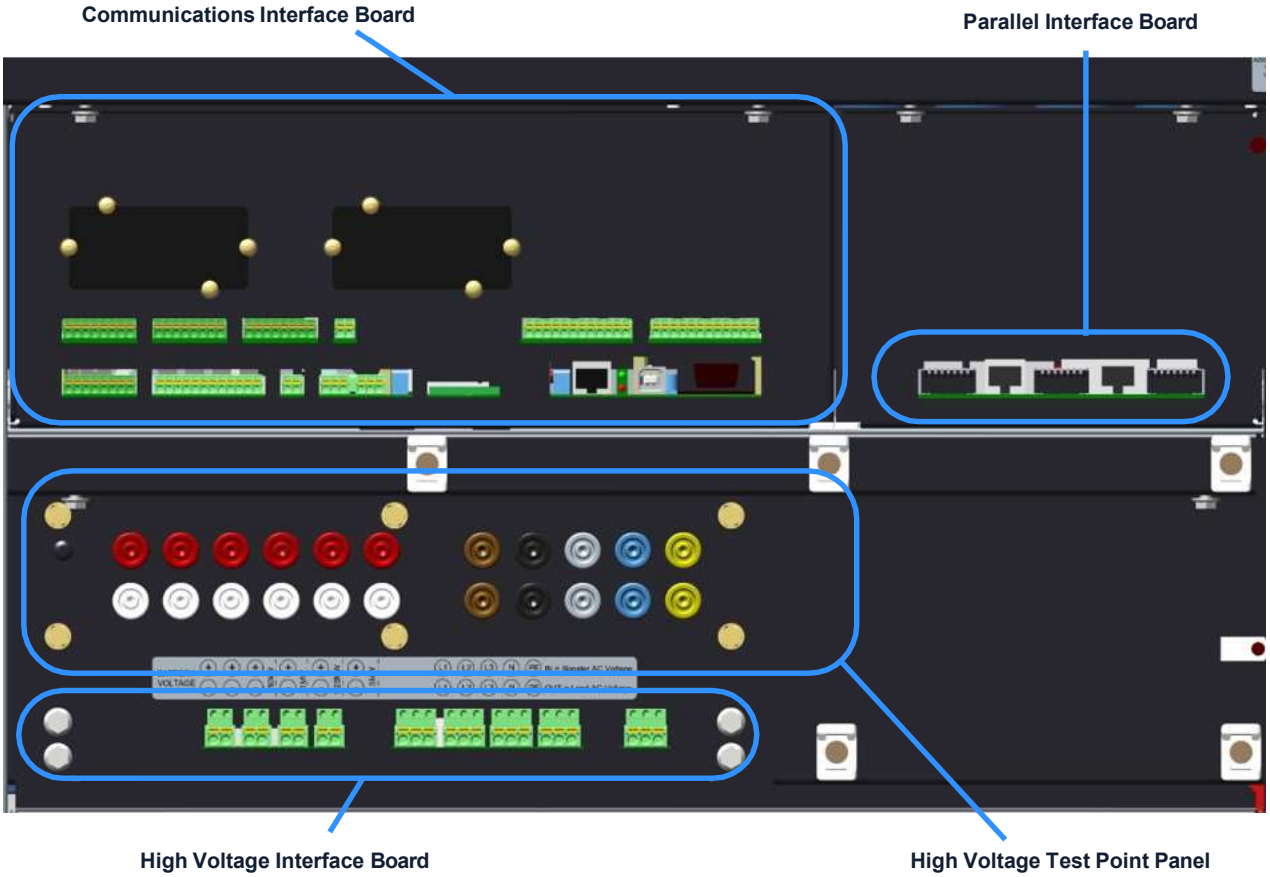

Figure 2.19 External interface facilities

Two external interface boards are located near the top of the distribution frame, as shown in Figure 2.19. The communications interface board provides a number of external connections that enable the customer to interface the UPS with a local network, building management system or a simple remote alarms facility. The parallel interface board is used to connect the parallel communications bus between two (or more) cabinets in a multi-cabinet system.

The high voltage I/O connectors are located below the communications interface board.

© Rehlko 2026

2.6.1 Communications interface board

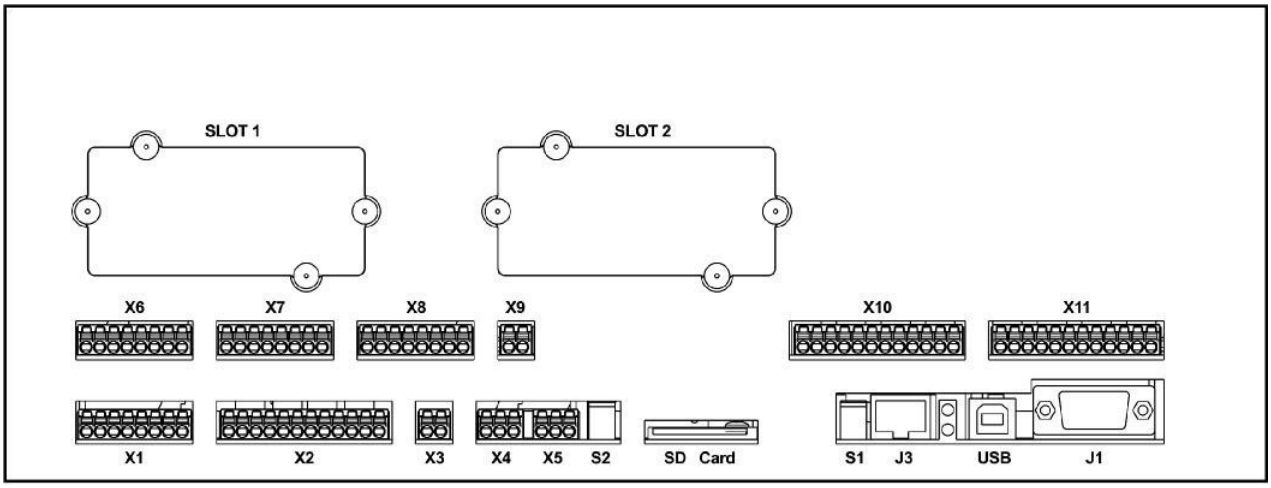

Figure 2.20 Communications interface board

Details of the communications interface board connections are provided in Chapter 9 (Options) later in this manual.

Network interface card slots (Slots 1/2) – two network interface card slots are provided to enable the UPS system to be incorporated into a network manage system for control and monitoring purposes using a compatible SNMP/Ethernet interface card.

Input Dry Ports X1, X7, X8 – these are volt-free inputs:

X1 is connected to standard inputs that signal; Generator ON, External output circuit breaker closure (option), External maintenance bypass closure, remote shutdown

X7 & X8 are configurable volt-free inputs

Input analogue port X6 – this input port is designed for industry standard 1-24V or 4-20mA analogue sensors.

The input to this port is programmable and can be customised according to the customer's requirements. All customisation must be carried out in the factory, before despatch.

Battery temperature sensor input X3 – for use with the standard battery sensor option offered by Rehlko

Modbus communication power X4 – differential 5V RS485 signals

CAN bus communication port X5 – differential 5V RS485 signals

Output Dry Ports X2, X10, X11 – these offer volt-free output connections:

X2 provides standard output that signal; common alarm, battery low, load on inverter, mains failure X10 & X11 offer configurable volt-free outputs

+24Vdc Output X9 – this provides a 24V power supply for the externally connected switched inputs

Smart Port J1 – RS232 serial port, 9-pin male D-type connector. Used to connect to a PC for data connection

USB – Same function and data stream as that connected to the RS232 port (J1). Only one port (USB/J1) may be in use at any time

Graphical display interface J3 – RJ45 connector interfaces the UPS with the graphical system control panel mounted on the door of the distribution frame.

© Rehlko 2026

2.6.2 Parallel interface board

The inter-module and inter-cabinet parallel control bus functions are described in paragraph 2.3.

Figure 2.21 UPS module parallel bus connectors

The UPS cabinet's internal parallel control bus is connected between the parallel interface board and each UPS module in a ring-like configuration.

The module connections are made to two fixed connectors attached to the top of the module's front plate, as shown in Figure 2.21 (A). Two locating spigots are fitted at the sides of these connectors to ensure that when the module is pushed into position the connectors correctly align with their respective sockets located on the top of the module frame (B). The alignment is aided by an insulated bar (C) which slide into a channel fixed to the roof of the frame.

On the parallel interface board the parallel control bus is accessible at to two RJ45 connectors (JR1 and JR2) which allows the bus to be extended to an additional UPS cabinet(s). Note that these connections also carry the multidrop data which enables the alarm data from any connected UPS module/cabinet to be processed by the 'master' cabinet.

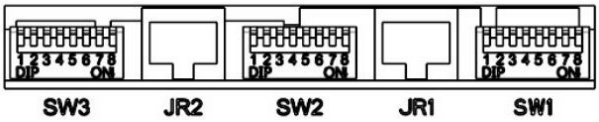

Figure 2.22 Parallel interface board

Three DIP switches (SW1, SW2, SW3) are used to configure the parallel interface board in a parallel system. They will be set by the commissioning engineer and should not be changed thereafter.

© Rehlko 2026

2.6.3 High voltage I/O interface

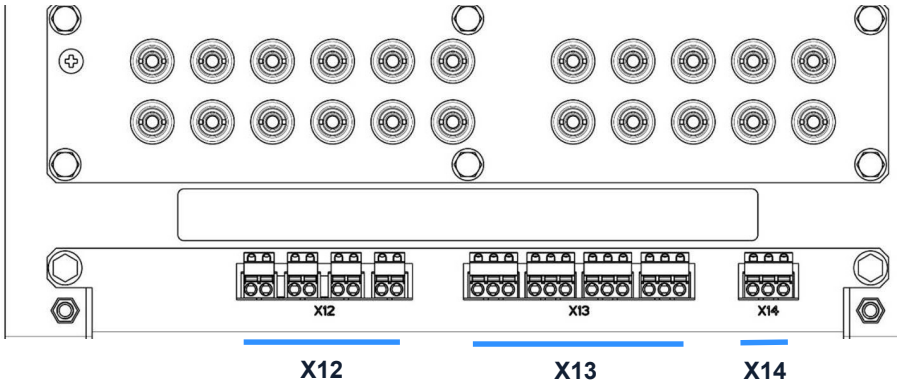

Figure 2.23 High Voltage I/O Interface

High voltage interface connections can be made to terminal blocks X12, X13, X14 which are located below the high voltage test point panel, as shown in Figure 2.19 and Figure 2.23.

WARNING: There is a risk of exposure to lethal voltages when the high voltage I/O terminals are exposed.

High voltage input port X12 – these are programmable inputs rated at 87-277Vac (50/60Hz)

High voltage output port X13 – these are programmable outputs rated at 5A @ 277Vac (50/60Hz) or 5A @ 30Vdc

Synchronisation input port X14 – used to connect an alternative synchronisation reference signal for the inverter, rated at 415Vac. This port is not normally used but can be activated by an approved engineer using special setting-up software.

© Rehlko 2026

3. System Control Panel

3.1 Introduction

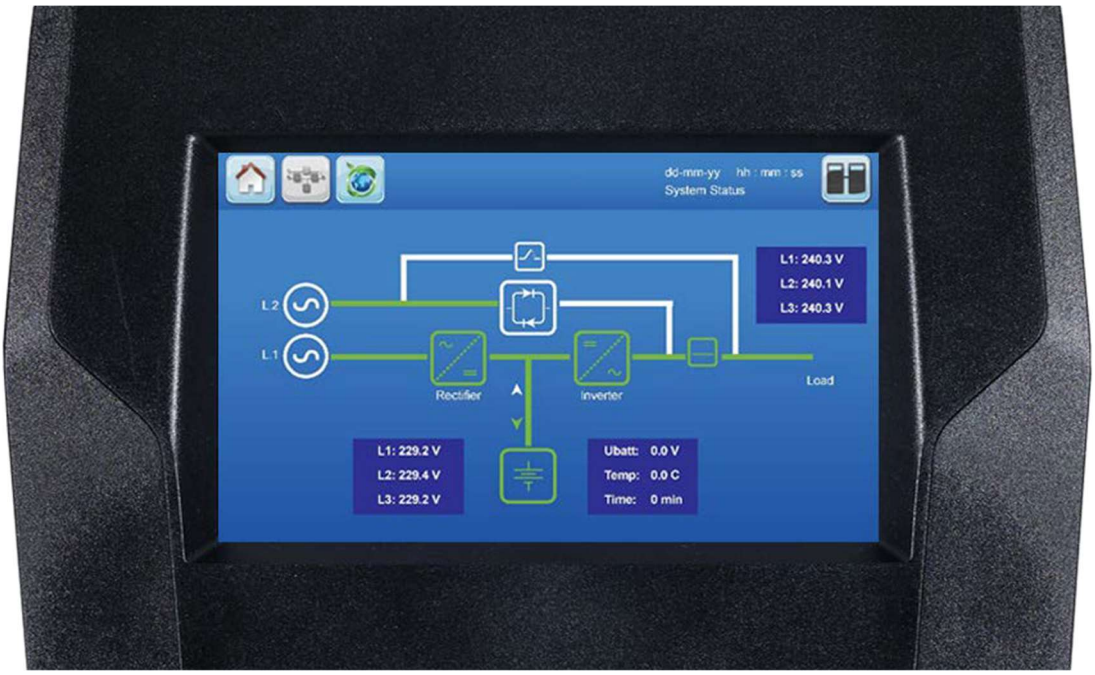

Figure 3.1 System control panel default display

The system control panel is located on the door of the cabinet's distribution frame. In a parallel-cabinet PW MF1500 DPA UPS system the system control panel is fitted to the cabinet that is configured as the 'master' cabinet – i.e. the cabinet that contains the master UPS module [Module 1-01].

The system control panel contains a microprocessor-based TFT touch-screen display which enables you to monitor and operate the UPS installation at a 'system' level. It displays the operational status of the overall UPS system as well as that of each individual UPS module. It enables you to:

- view the input/output/battery operating parameters (voltage, current etc.) for the entire system
- execute a load transfer between inverter and bypass, and vice-versa (password controlled)
- monitor the power flow through the UPS system, or through a selected UPS module by means of a colour-coded mimic diagram
- check system and module level alarm and events histories
- acknowledge an event occurrence
- silence alarms
- monitor the battery state and autonomy time

© Rehlko 2026

3.1.1 Display Header Bar

Figure 3.2 illustrates the display header bar that is presented at the top of every screen. It contains number of touch-sensitive icon buttons and also displays some key system status information.

A	**Home button**	Accesses the HOME screen from any other screen *(see paragraph 3.2)*.
B	**Mimic button**	Accesses the MIMIC diagram screen which shows the shows the path of the power flowing through the UPS system and indicates its operating status *(see paragraph 3.3)*.
C	**Xtra VFI button**	This button is only visible if the Xtra VFI function has been activated. Pressing this button toggles between the `EXTRA VFI MEASURES` screen and the `EXTRA VFI STATUS BAR` screen *(see paragraph 3.4)*.
D	**Warning & Event button**	This button is only visible if an alarm or newly monitored event occurs. Pressing this button will silence the audible alarm and open the `EVENTS` screen *(see paragraph 3.2.1)*.
E	**Date**	The date is set in the `USER` screen menu and used to date-stamp the alarms/events log.
F	**Time**	The time is set in the `USER` screen menu and used to time-stamp the alarms/events log.
G	**Module selection button**	Accesses the `MODULE SELECTION` screen from where it is possible to select an individual module and observe its status and measurements data *(see paragraph 3.5)*. This icon is red if there is an active fault or event associated with a UPS module.
H	**UPS number**	When the UPS system is commissioned, each UPS module is given a sequential ID number. The number shown on the display header bar is used to identify the module associated with the data currently being displayed on the system control panel screen (e g. `P:01` = module 1 in the example shown). No number is displayed if the module control panel is displaying 'system' level parameters, such as the system mimic screen, measurements screens etc.
I	**System status OR Load Status**	`System status`: indicates that the user is in the system level navigation. `Load status:` displays whether or not the load is protected, when the user is viewing at the module navigation level.

Figure 3.2 Display header bar

A detailed description of each of the screens that can be accessed using the display header bar buttons is provided on the following pages.

3.2 HOME screen

The HOME screen is accessed by pressing the Home icon on the display header bar. At the bottom of this screen are six touch-sensitive buttons that provide access to various monitoring, control and set-up function screens.

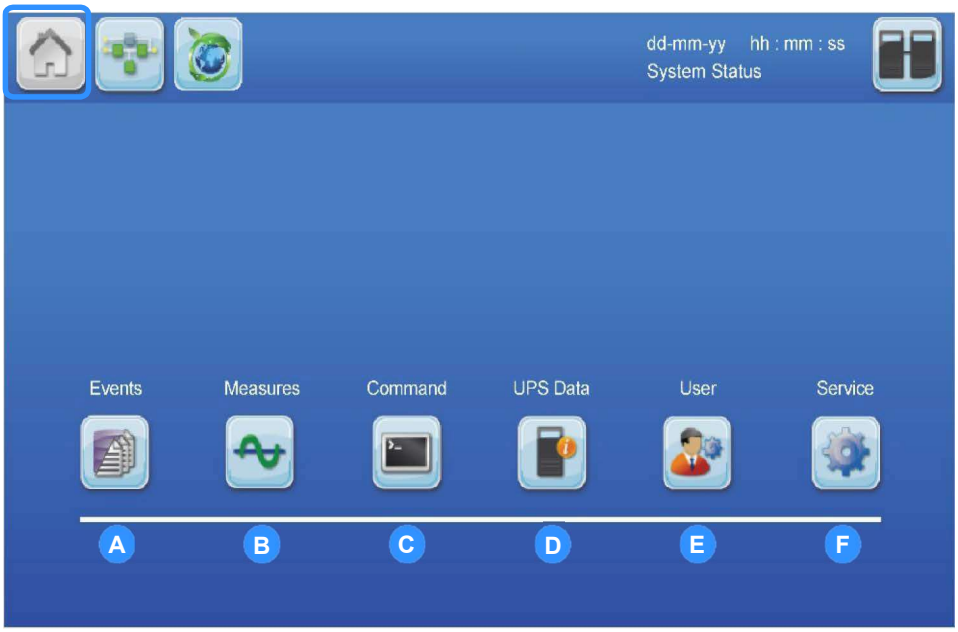

A	**Events**	Displays a list of recently occurred events with date, time, event name, description and sequential ID number. The Events are described in paragraph 3.2.1.
B	**Measures**	This item displays the full set of measurements for each of the UPS functional blocks, as described in paragraph 3.2.2.
C	**Command**	This menu enables the user to change the UPS operating mode between LOAD ON INVERTER and LOAD ON BYPASS *(see paragraph 3.2.3)*.
D	**UPS Data**	Provides non-editable information regarding the UPS module identity *(see paragraph 3.2.3)*.
E	**User**	Enables setting the date and time, automatic battery test, etc, as described in paragraph 3.2.5.
F	**Service**	This area is used by a trained service engineer only and is password protected .

Figure 3.3 HOME screen

3.2.1 Events

Pressing the HOME screen Events button or display header bar Warning button (when visible) will open the EVENTS screen, shown here, which displays a list of events in chronological order.

Each event line identifies the affected UPS module (Id), together with an event status and number (Ev.) as well as a textual event description. The UP/DOWN arrows on the top right of the screen allow you to scroll through the events history.

Note that changes to the system/module operating status are registered as events and not just operating errors or faults.

Figure 3.4 EVENTS screen

3.2.2 Measures

Pressing the HOME screen Measures button will open the MEASURES screen, shown here, which displays the working values of various UPS, Battery and Xtra VFI operating parameters.

You can select the parameters to be displayed by pressing the UPS Meas, Battery and Xtra VFI buttons on the left side of the screen.

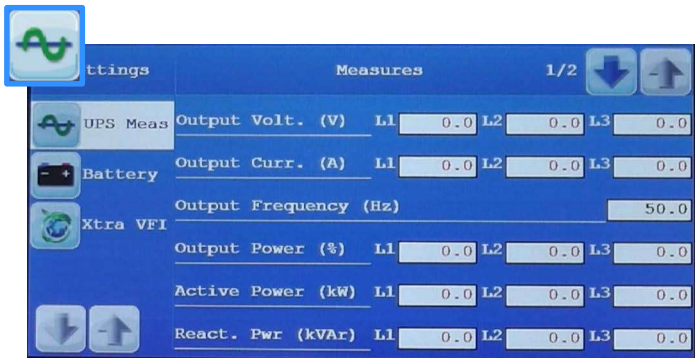

UPS Measures (Figure 3.5)

Two screens are required to show all the UPS parameter measurements; these can be selected using the UP/DOWN arrows on the top right of the screen.

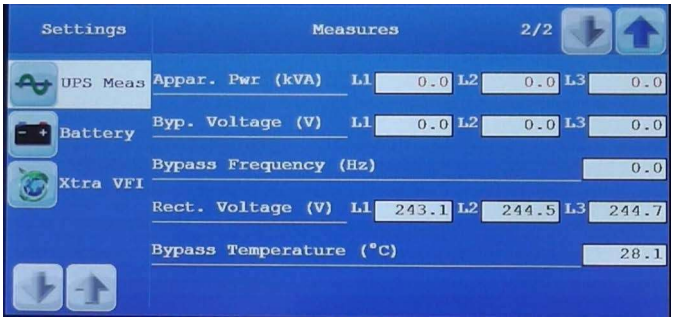

Figure 3.5 MEASURES screen (UPS)

Battery Measures (Figure 3.6)

In a multi-battery installation such as a large UPS system where the UPS modules are connected to a number of separate batteries, the Battery MEASURES screen monitors every battery installation and indicates the 'worst-case' scenario.

For example, the screen will show the highest temperature, greatest discharge current and lowest capacity of any battery installation.

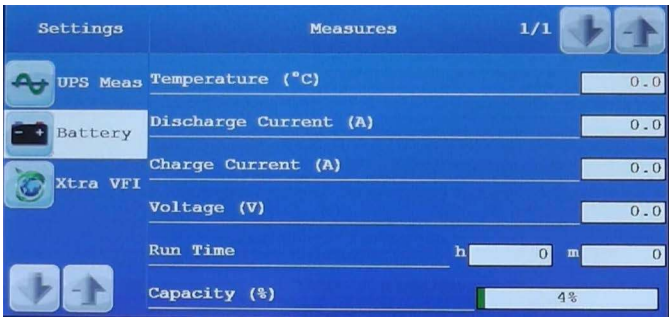

Figure 3.6 MEASURES screen (Battery)

Xtra VFI Measures (Figure 3.7)

The XTRA VFI screen show the Xtra VFI operating status and indicates the number of inverters that are operating or on 'standby'. It also indicates the energy saving attributed to the Xtra VFI operation.

The Total Saved Energy [kWh] indication is cumulative, but the Saved Energy [kWh] value can be reset by pressing the Reset button located at the lower right corner of the screen. This allows you to measure the amount of save energy over a given period, between resets.

Note that this screen can also be accessed by pressing the Xtra VFI button on the display header bar when the XTRA VFI STATUS BAR screen is displayed.

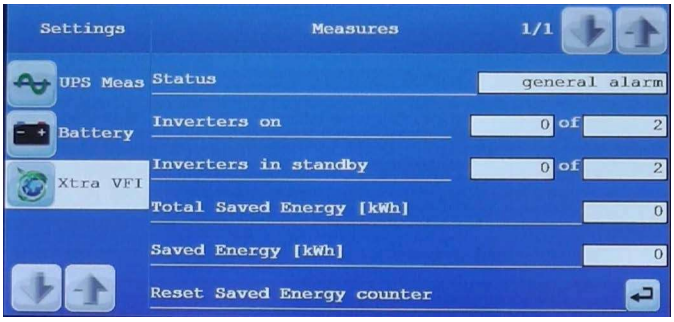

Figure 3.7 MEASURES screen (Xtra VFI)

© Rehlko 2026

Measures summary

UPS Measurements	Output Voltage (V) Output Power (%) Apparent Power (kVA) Bypass Frequency (Hz)	Output Current (A) Active Power (kW) Inverter Voltage (V) Rectifier Voltage (V)	Output Frequency (Hz) Reactive Power (kVAr) Bypass Voltage (V) Bypass Temperature (ºC)
Battery Measurements	Temperature (ºC) Voltage (V)	Discharge Current (A) Run Time	Charge Current (A) Capacity(%)
Xtra VFI Measurements	Status Total Saved Energy (kWh)	Inverters on (operating) Saved Energy (kWh)	Inverters in standby Reset (Saved Energy Counter)

3.2.3 Commands

Pressing the `HOME` screen `Commands` button will open the `COMMANDS` screen shown here.

This password-protected screen allows you to manually transfer the load between inverter and bypass by pressing the appropriate button on the right side of the screen.

When the selected transfer has taken place, the screen will change to show the `MIMIC` screen *(see paragraph 3.3)*.

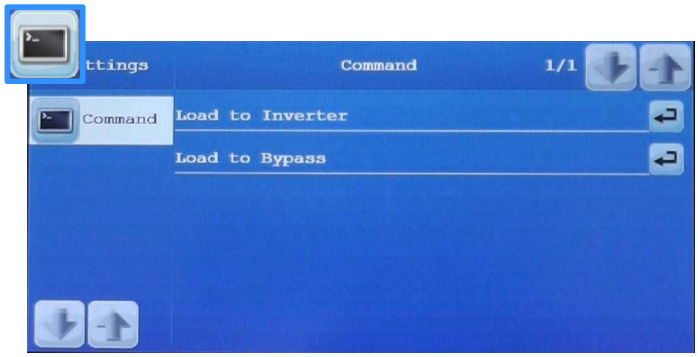

Figure 3.8 COMMANDS screen

3.2.4 UPS Data

Pressing the `HOME` screen `UPS Data` button will open the `UPS DATA` screen shown here. This screen displays the UPS serial number of the master module and other none-editable data that is entered by the manufacturer or commissioning engineer.

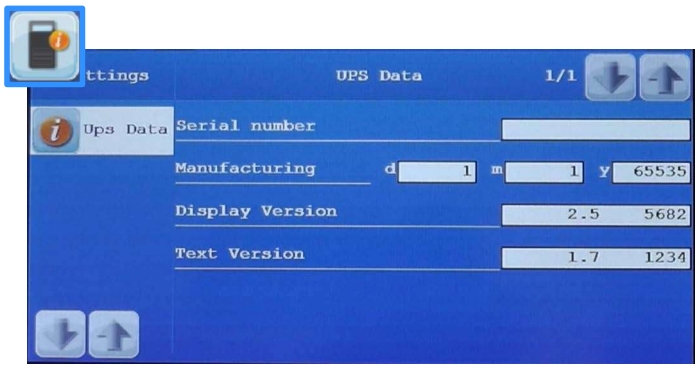

Figure 3.9 UPS DATA screen

3.2.5 User

Pressing the `HOME` screen `User` button will open the `USER` screen shown here. This screen allows you to select the system control panel language, set the screen contrast, and turn off/on the sound associated with operating the touch buttons.

Note: The screen will be calibrated by the commissioning engineer if necessary and we strongly recommend that you do not touch the Display Calibration button.

Figure 3.10 USER screen

© Rehlko 2026

3.3 MIMIC screen

The `MIMIC` screen is the default screen shown on the system control panel during normal operation. It shows the path of the power flowing through the UPS system and provides basic input, battery and output metering.

This screen can also be accessed by pressing the `Mimic` button on the display header bar or by pressing a particular `UPS Module` icon button on the `MODULE SELECTION` screen *(see paragraph 3.5)*. If you access the `MIMIC` screen from the `HOME` screen the mimic diagram and on-screen metering relate to the UPS 'system' as a whole; but when it is accessed from the `MODULE SELECTION` screen the mimic diagram relates directly to the selected module, and no on-screen metering is presented.

Note: When the screen is working at a 'module' level the module number is shown adjacent to the Module Selection button on the display header bar (e.g. P:01).

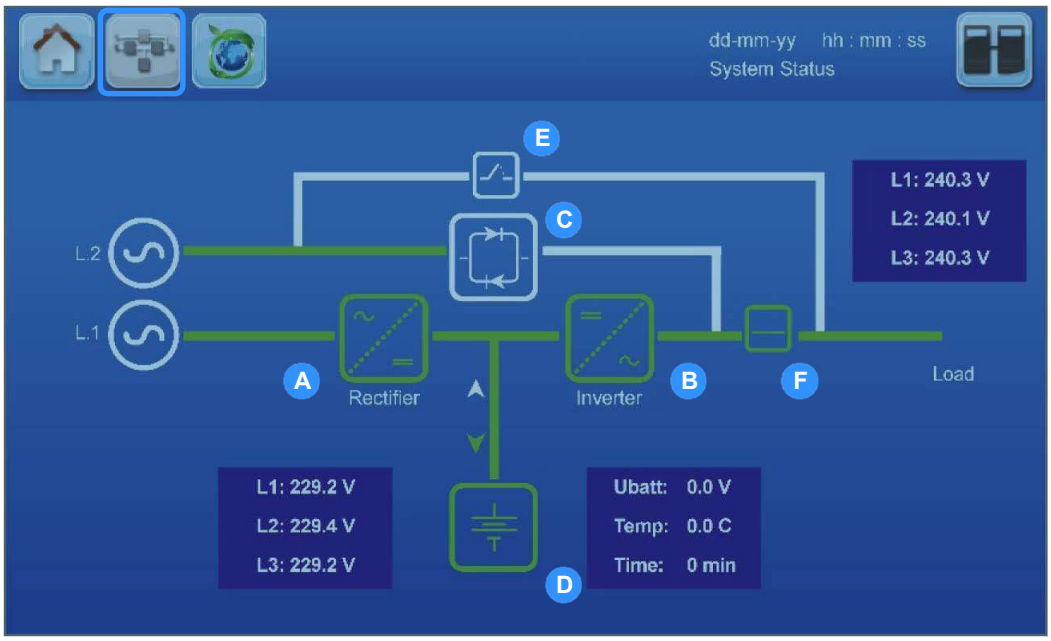

A	**Rectifier**	Green: Red:	The rectifier is turned on. The rectifier is switched off.
B	**Inverter**	Green: Red:	The inverter is turned on and supplying load power. The inverter is switched off.
C	**Static Bypass**	Green: White:	The load is connected to the bypass (or the system is operating in ECO-mode). The bypass is off.
D	**Battery**	Green: Yellow: Red:	Battery is charging or discharging – the direction of flow is indicated by the adjacent green arrowheads. Battery low. Battery is either faulty, not connected or fully discharged.
E	**Maintenance Bypass Switch**	Yellow: White:	External maintenance bypass closed (option), load on maintenance bypass Maintenance bypass is open (option)
F	**Output switch (external to the UPS cabinet)**	Green: White:	Output switch is closed (Position ON) Output switch is opened (Position OFF)

Figure 3.11 MIMIC screen (at system level includes on-screen metering)

3.3.1 MIMIC screen indications

Key Point: The input mains (L1) and bypass mains (L2) are shown as separate connections on the mimic diagram; however, these two inputs are connected to a common input mains supply in the distribution frame.

The status of the major UPS power blocks and power paths is colour-coded as follows:

GREEN:	ACTIVE – the power block is turned on and operational / the power path is live.
WHITE:	INACTIVE – the power block is functional but not currently in use (e.g. static bypass operational but not required so it is turned OFF) / the power path is available but not currently used
YELLOW:	WARNING – the UPS is operating on maintenance bypass
RED:	FAULT – the power block is faulty or turned off / the power path has lost its power source

Three meters are included on the mimic display screen to indicate the UPS input and output voltage, frequency and current. The displayed battery parameters include the battery voltage, temperature and remaining autonomy time.

Examples of the mimic displays for the major operating modes are shown below.

ON-INVERTER

This is the normal mimic indications for an On-Line UPS system.

1. The rectifier and inverter are working normally.
2. The battery is charging.
3. The parallel switch (Q2) is closed and connecting the UPS output to the load.
4. The bypass line (L2) is live and available.

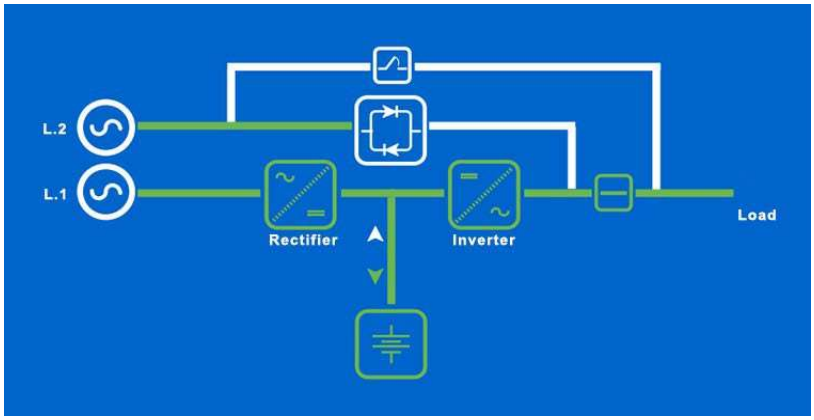

Figure 3.12 ON INVERTER mimic

ON-BATTERY

This mimic shows that the UPS is operating on battery due to the loss of mains power (L1).

1. The rectifier is turned off.
2. The battery is discharging.
3. The inverter is still operating and the providing power to the load.
4. In a split-bypass system the bypass line (L2) will be live if the bypass supply is still available, otherwise it will indicate a power loss (red) along with the rectifier mains input (L1).

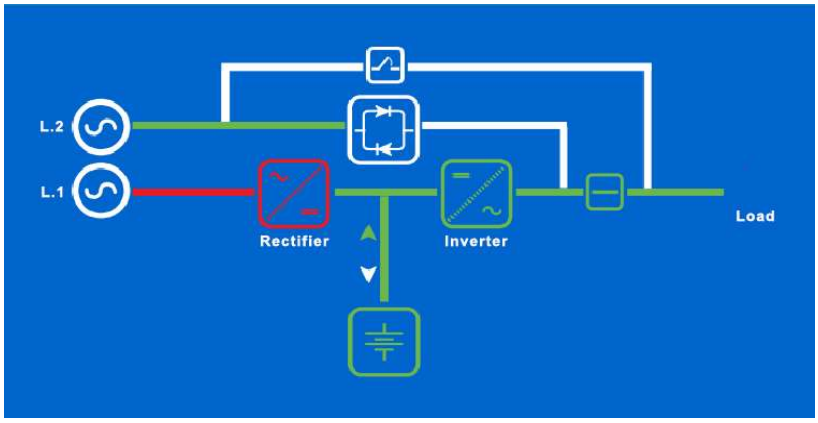

Figure 3.13 ON BATTERY mimic

© Rehlko 2026

ON-BYPASS

This mimic indicates that the load is being supplied via the static bypass line, and it is the normal indication if the system is operating in 'ECO' mode.

If the system is not set to operate in ECO mode, this state indicates that the load has either been:

5. Manually transferred to bypass.
6. Automatically transferred due to an output overload that has caused the inverter to shut down.
7. Transferred due the loss of module redundancy.

If the transfer to bypass is due to an inverter fault, the rectifier will continue working normally to maintain battery charging.

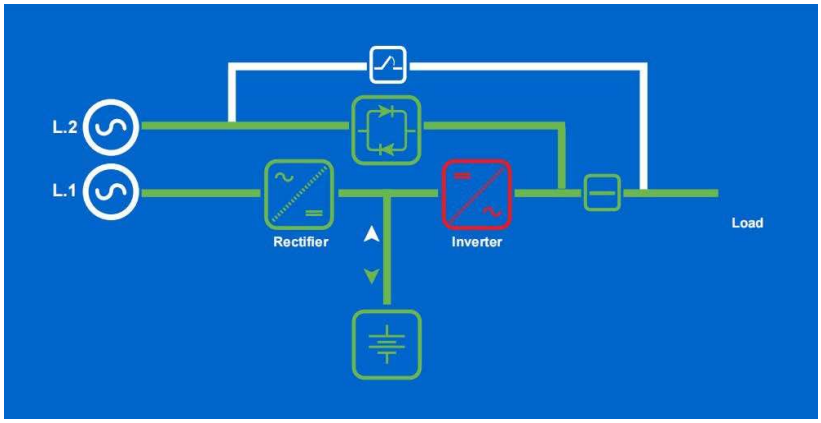

Figure 3.14 ON BYPASS mimic

ON MAINTENANCE BYPASS

This mimic indicates that the maintenance bypass switch is closed and the load is connected to the bypass supply through both the 'maintenance bypass' and 'static bypass' lines in parallel.

1. The rectifier is working normally.
2. The battery is charging.
3. The Inverter is turned OFF.

if the cabinet's parallel switch (Q2) is now opened, the UPS modules will be totally isolated from the UPS output and can be shut down, and withdrawn from the cabinet rack if required.

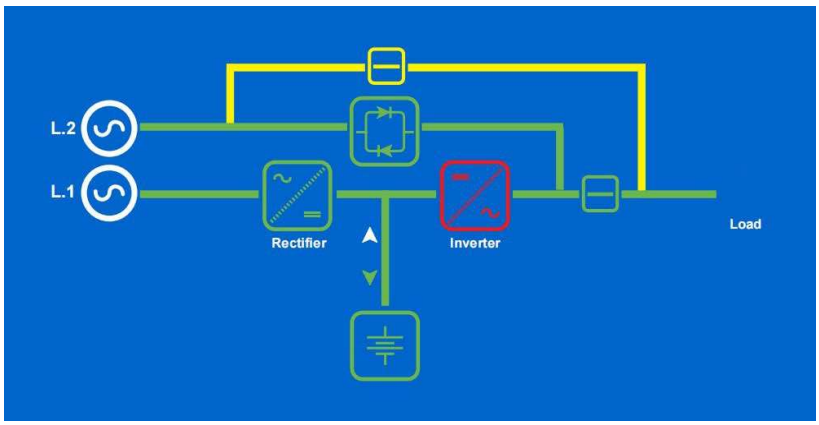

Figure 3.15 ON MAINTENANCE BYPASS mimic

© Rehlko 2026

3.3.2 Metering from the MIMIC screen

On the `MIMIC` screen, the icons representing the rectifier, inverter, static bypass and battery power blocks also act as touch-sensitive buttons which, when pressed, open a version of the `MEASURES` screens related to the selected power block. This is applicable when the mimic is displaying both ‘system’ or ‘module’ level data.

Note: The screens that are accessed through this path use the same data sources as the MEASURES screens described earlier, but the displayed content is organised differently.

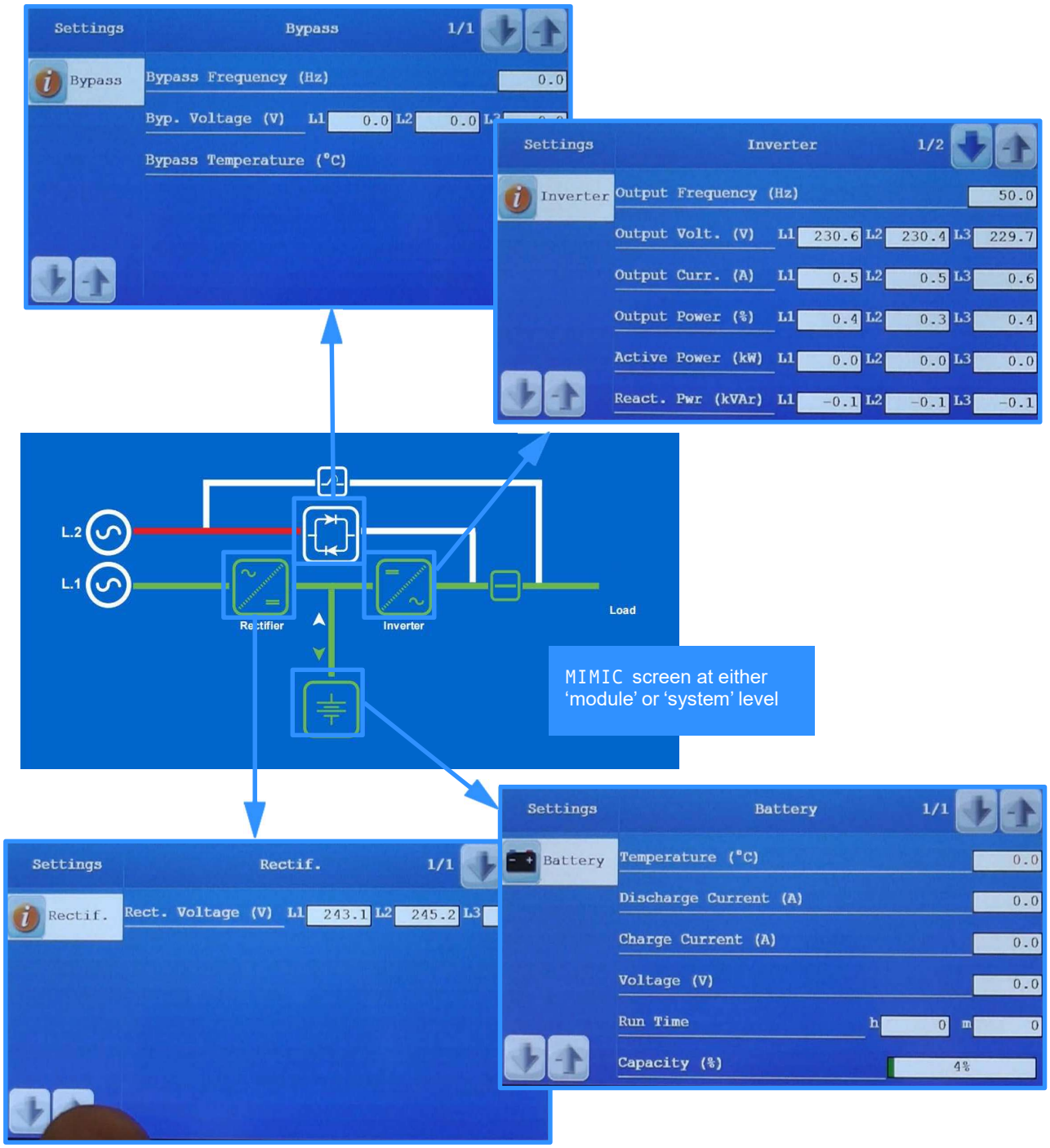

Figure 3.16 MIMIC Metering

3.4 XTRA VFI screen(s)

There are two screens directly related to the Xtra VFI function; the `XTRA VFI STATUS BAR` screen and the 'XTRA VFI MEASURES' screen. These can be accessed by pressing the `Xtra VFI` button on the display header bar, which is only visible if the Xtra VFI function is enabled.

You can toggle between these two screens by pressing the Xtra VFI button on the display header bar. To exit these screens you must press a different button on the display header bar or select another function in the `MEASURES` *screen.*

A	**Load**	The dark green area of the status bar indicates the applied load as a percentage of the UPS system rated capacity.
B	**Active**	The light green area of the status bar indicates the remaining capacity of the active inverters – i.e. those inverters that are turned on, and operating under the control of the Xtra VFI function.
C	**Standby**	The light blue area of the status bar indicates the capacity of the modules operating on standby that can be called upon by the Xtra VFI function if required to support any load increase.

Figure 3.17 Xtra VFI status bar screen

The `XTRA VFI STATUS BAR` screen, shown above, provides a bar chart representation of the Xtra VFI operation in terms of relative capacity:

- Load: the existing load demand
- Active: the free capacity immediately available from the active modules due to the programmed HLS or redundancy configuration
- Standby: the power available from those modules currently running on standby that can be called upon when needed

© Rehlko 2026

Figure 3.18 Xtra VFI measures screen

The 'XTRA VFI MEASURES' screen, which can also be access by pressing the Measures button on the HOME screen, provides numerical data concerning the Xtra VFI module status and saved energy, and is described in detail on page 28.

ON-STANDBY

This mimic indicates that the inverter is operating on Standby as part of the Xtra VFI control:

1. The input mains (L1) and bypass mains (L2) are available.
2. The rectifier is fully operational and providing battery charging.
3. The inverter and static bypass are both turned off, therefore the UPS module is not providing any output power.

When the VFI requires this UPS module to return to normal operation it immediately switches the inverter from its 'standby' to 'on line' mode.

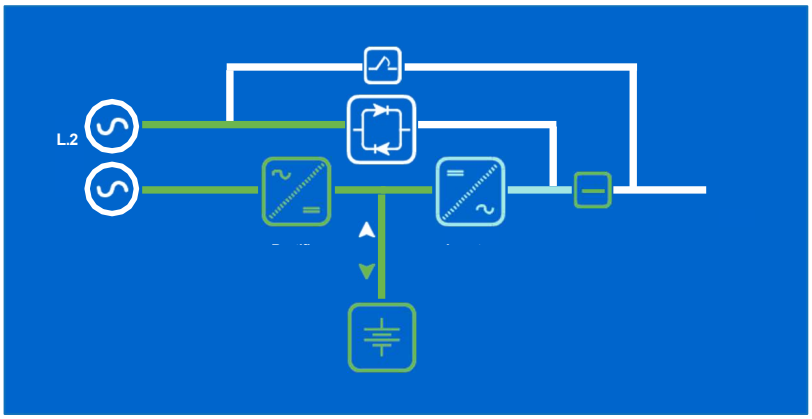

Figure 3.19 ON STANDBY mimic

3.5 MODULE SELECTION screen

The module selection screen, shown below, is accessed by pressing the `Module Selection` button on the display header bar. On opening, the `MODULE SELECTION` screen displays an icon for each UPS module installed in the system and immediately indicates its operational status by means of its displayed colour.

The UPS modules are identified numerically by an ID number which is allocated during commissioning. The diagram below identifies five modules fitted to a single cabinet, with the bottom module assigned an ID of 01. Note that the letter 'M' is shown against module 01 to indicate that it is the 'master' module.

A PW MF1500 DPA system can comprise up to four cabinets each fitted with up to six UPS modules, therefore the screen shown in Figure 3.20 can display a maximum of 24 UPS modules.

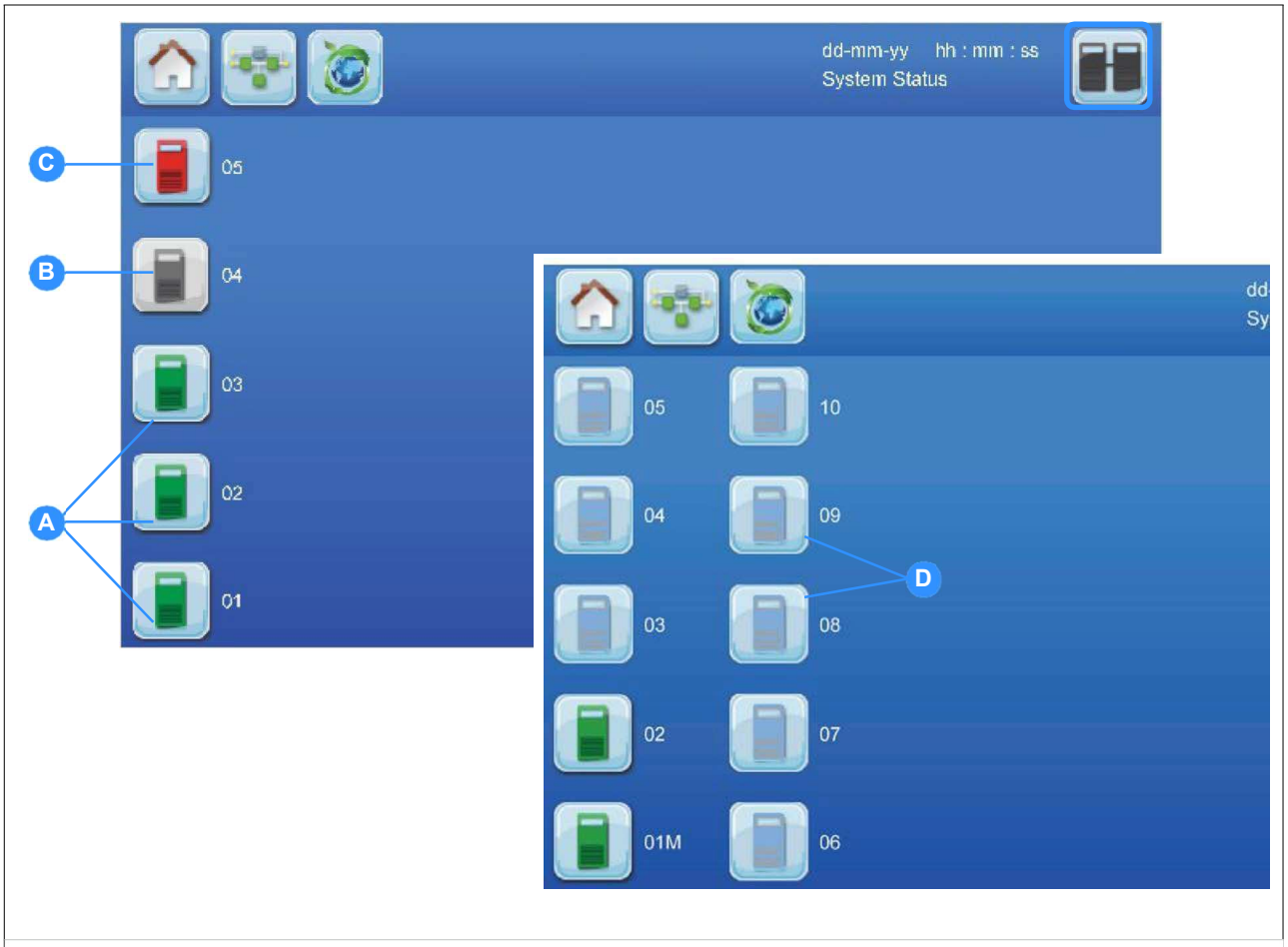

A	**Green**	Module in normal operation – on line
B	**Grey**	Module inactive – turned off
C	**Red**	Module has a general alarm
D	**Light Blue**	Module operating in standby – Xtra VFI mode only

Figure 3.19 Module selection display screen

Note that in a multi-cabinet system if a UPS cabinet is not fully populated, the numbering protocol will not skip the missing module(s). For example, if both cabinets in a two cabinet system each have only five modules installed there will be no icons shown in the [06] and [12] slots, and the numbering sequence for cabinet 2 will begin with module [07].

If you press one of the touch-sensitive module icon buttons the `MIMIC` screen will open to allow you to observe the operation and metering for the selected module, as described in paragraph 3.3.

© Rehlko 2026

4. Installation Planning

4.1 Introduction

It is the responsibility of a customer-appointed installation team to ensure that the UPS equipment is located in a suitable environment and complete any necessary mechanical, building and electrical preparation work prior to installing the UPS system.

A certain amount of pre-planning will help ensure a smooth and trouble-free UPS installation experience. This chapter contains essential information concerning the environmental, mechanical and electrical requirements that should be considered when planning the installation of the PW MF1500 DPA UPS system.

Key Point: If you are installing an external battery cabinet or battery rack supplied by Rehlko you should refer to the manual that is provided with the cabinet for installation instructions.

4.2 Environmental and mechanical planning

4.2.1 Environmental considerations

It is essential that the following environmental guidelines are observed when selecting a suitable location and operating environment for the UPS and batteries.

1. The route to the installation location must allow the equipment to be transported in an upright position.
2. The floor at the proposed installation site and en-route from the off-loading point must be able to safely take the weight of the UPS and battery equipment plus fork lift or moving aids during transit.
3. You must avoid a locations with a high ambient temperature, moisture or humidity:
   a. The installation site humidity should be <95% non-condensing.
   b. The prescribed equipment ambient temperature is 0°C to +40°C.
   c. A battery temperature of 20°C is recommended to achieve a long battery life.
   d. If an air conditioning system is used it must be able to provide a sufficient amount of cooling air to keep the room within the prescribed temperature range.
   e. The air entering the UPS must not exceed +40°C.
4. To obtain the best system performance you should also consider the following conditions:
   a. Fire protection standards must be respected.
   b. The location must be free of dust and corrosive, or explosive, gases.
   c. The location must be vibration free.
   d. If the UPS is located in bayed enclosures, partition walls must be installed.
   e. The minimum cabinet clearances described below must be provided.

4.2.2 Installation clearances

Figure 4.1 illustrates the required PW MF1500 DPA UPS cabinet installation clearances. This drawing shows that no back

(A) or side (B1) clearance is required; however the cabinet doors must be opened to at least 95° in order to access/ remove some components, so if the wall at the right of the UPS cabinet protrudes beyond the cabinet front then a minimum clearance of 100 mm (B2) must be provided to allow the door to be fully opened. A front clearance of 1555 mm

(C) is required to enable the inverter modules to be removed or replaced by an individual service engineer. Ideally, the space provided in front of the cabinet should be increased beyond the specified 1555 mm where possible to enable unrestricted passage in front of the cabinet when the cabinet doors are open.

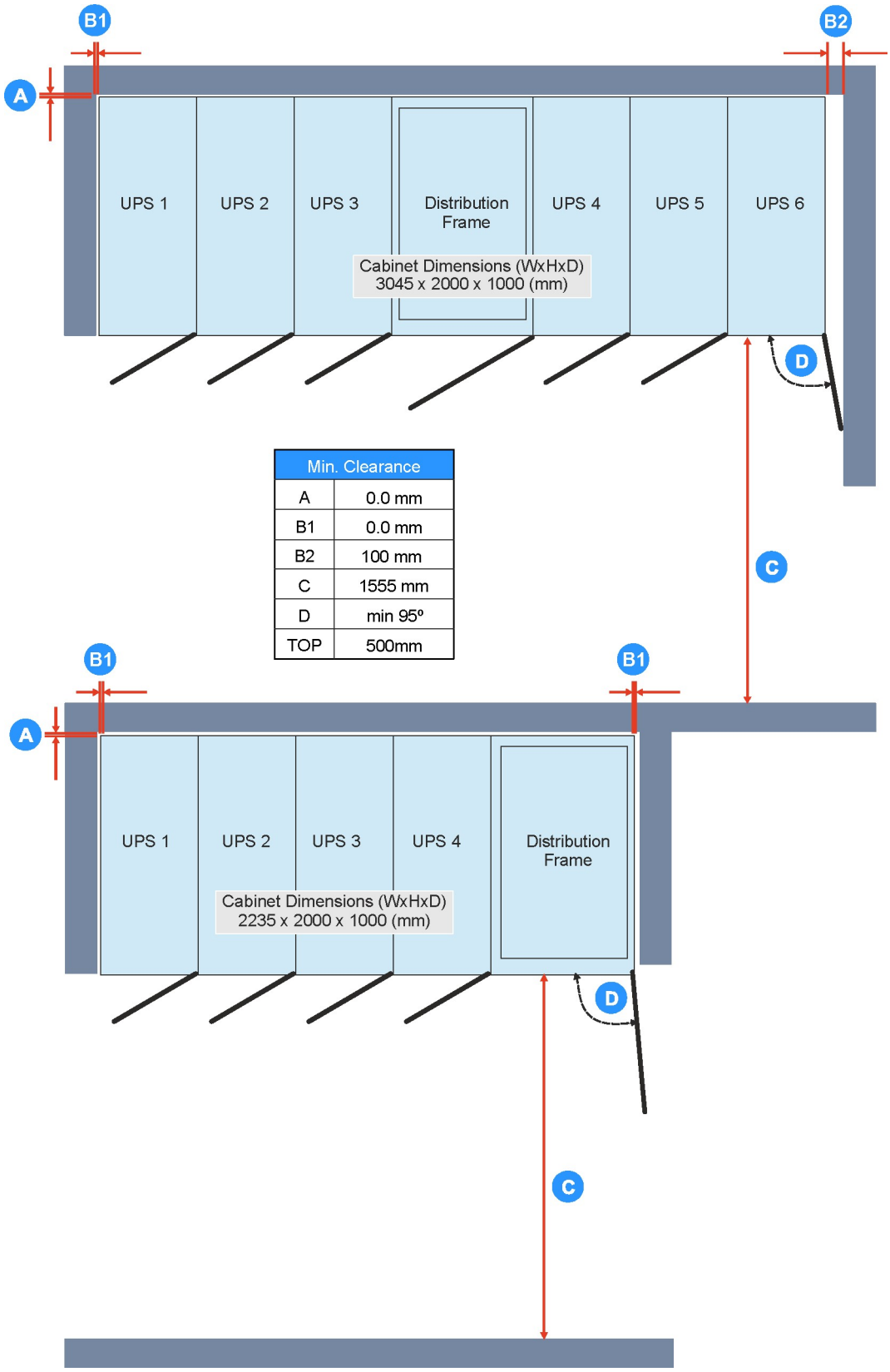

Min. Clearance	
A	0.0 mm
B1	0.0 mm
B2	100 mm
C	1555 mm
D	min 95º
TOP	500mm

Figure 4.1 Clearances for a PW MF1500 DPA stand-alone cabinet

Battery installation

The design of the battery installation is bespoke to the individual site; however, we recommend that where possible the battery is contained in a purpose-built cabinet and installed immediately adjacent to the UPS cabinet. The required clearances around a battery cabinet will be specified in the installation manual provided by the battery cabinet supplier.

If the battery is to be mounted in an external battery rack we again recommend that the rack is installed is as close as possible to the UPS cabinets to minimise the length of the DC cable runs. The battery cables should be sized to compensate for the DC voltage drop between the battery installation and UPS – contact Rehlko for installation advice and technical support if necessary.

4.2.3 Floor fixings

The UPS cabinet has a hole in the bottom of each leg to enable the cabinet to be anchored to the floor. Depending on the type of flooring in use – e.g. concrete/cement, steel plinth, raised floor pedestals etc – it will be necessary to carry out some preliminary work in preparation for the selected fixings, for example to drill holes for rawl bolts.

Figure 4.2 shows detailed dimensions for the cabinet feet and fixing points. In the diagram the base of the UPS frame is shown on the left and the distribution frame on the right.

In all cases the fixing holes are 13 mm in diameter, designed to accept M12 mounting hardware.

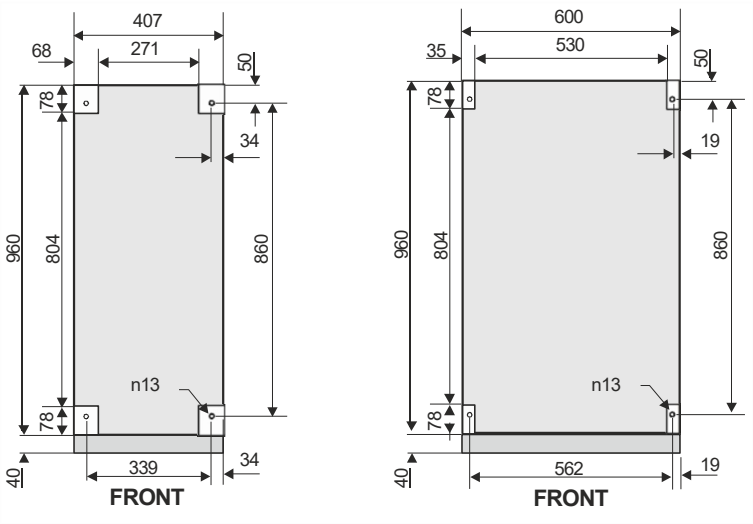

Figure 4.2 Cabinet fixing point dimension details

Note: The cabinet must be secured in place before any electrical wiring is connected.

The following pages provide floor plan dimensions for both four (1000 kVA) and six (1500 kVA) module cabinets.

© Rehlko 2026

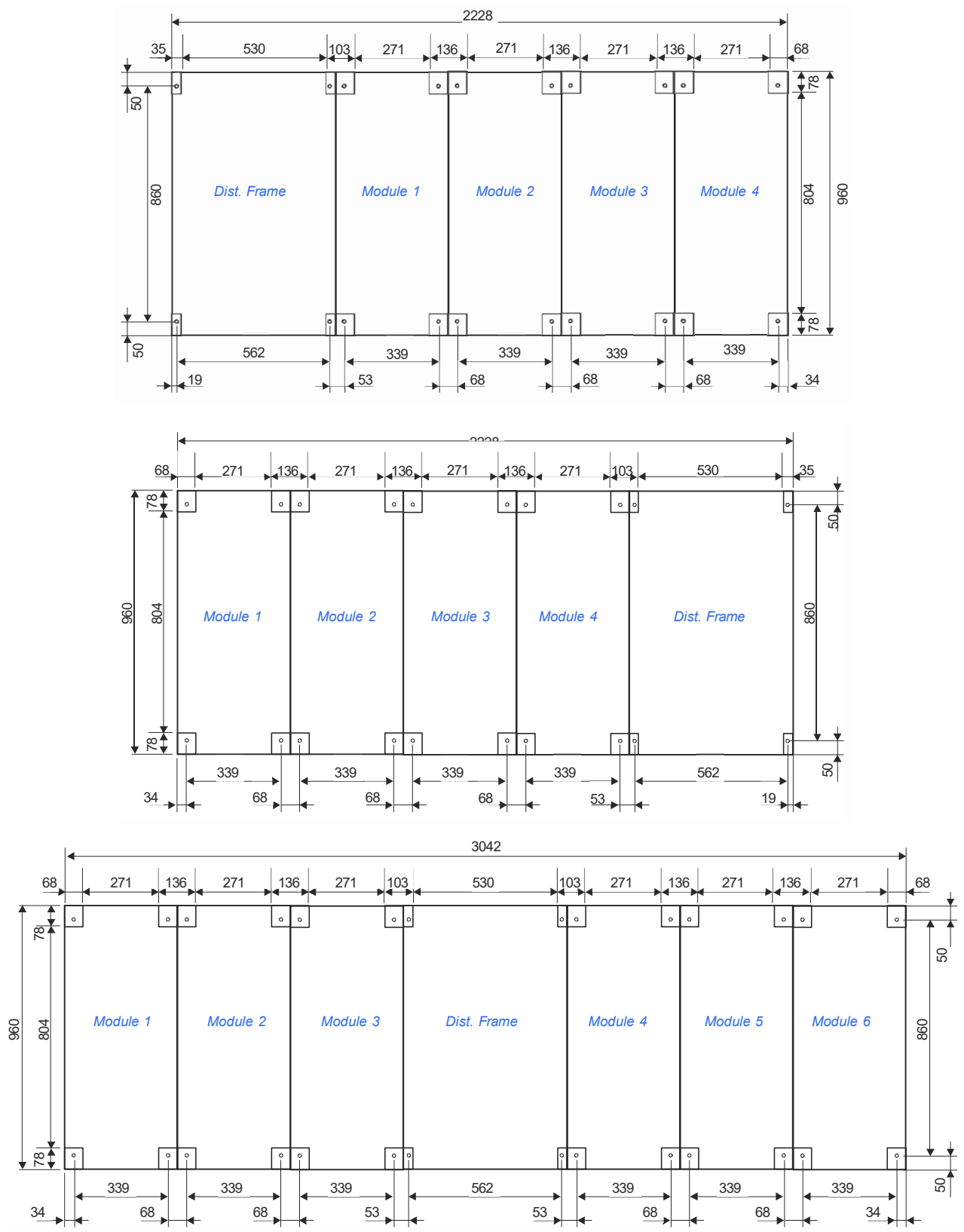

Figure 4.3 PW MF1500 DPA Cabinet floor fixing dimensions

4.3 Electrical planning

The information in this section should help with the preparation and planning of the UPS power cabling.

Key Point: All cable containment provisions should be completed (and cables laid if necessary) before the cabinet is placed in its final position.

This is especially relevant if the cabinet is to be installed with no rear or side access.

4.3.1 General cabling requirements

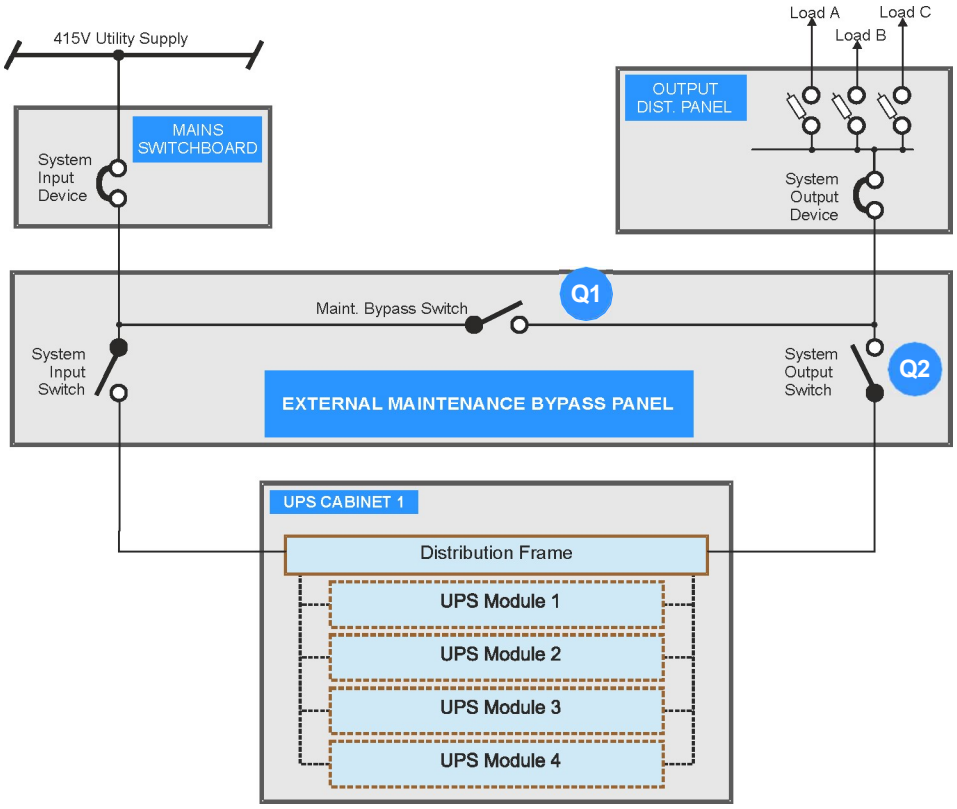

Figure 4.4 Typical wiring for a single UPS cabinet

Input/output supply protection

There are no input or output power isolators or circuit breakers fitted within the UPS cabinet itself, therefore it is essential to fit a suitably rated system input device at the mains supply switchboard to provide overload protection and a means of disconnecting the entire system from the mains supply. Similarly, a system output device should be installed in the load distribution panel to protect the UPS system against severe overload under fault conditions.

IMPORTANT NOTE: It is the customer's responsibility to ensure that the external supply fuses, or other protective devices, are correctly sized to satisfy the recommended level of UPS protection. We also recommend that a spare set of fuses are held locally to ensure they are readily available.

© Rehlko 2026

Maintenance bypass facility

The UPS installation usually includes an external maintenance bypass facility (MBP) to enable the UPS cabinet(s) to be shut-down and completely isolated from the input mains supply if required. The MBP is bespoke and may be contained in a dedicated switchgear cabinet or fitted to a pre-existing switch panel. Rehlko can supply a range of MBP switchgear.

Figure 4.4. illustrates a single-cabinet UPS system with a maintenance bypass facility, and shows that when the 'system input switch' and 'system output switch' are both open and the 'maintenance bypass switch is closed the load is connected directly to the unprotected utility mains supply.

Although the 'UPS cabinet output switch' and 'maintenance bypass switch' are external to the UPS cabinet their status is indicated on the module control panel LCD screen and system control panel TFT screen, where the switches are annotated as '`ExQ1`' and '`ExQ2`' respectively. This is illustrated in Figure 4.5, which shows the maintenance bypass (`ExQ1`) in both open and closed conditions.

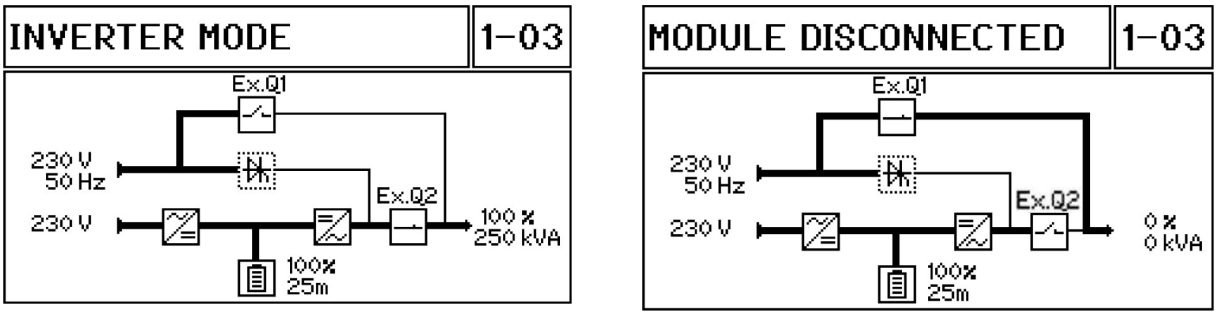

Figure 4.5 External switch status indication (Q1 / Q2)

Q1/ Q2 status indication require a set of normally-open auxiliary contacts of these switches to be connected to the communications interface board located in the cabinet's distribution frame.

It is important that the maintenance bypass switch is not closed while the UPS is operating on-inverter as this could feed the raw mains from the bypass supply back to the inverter output and cause inverter damage. To prevent this situation occurring, the maintenance bypass switch can be interlocked with the UPS by means of an electro/mechanical interlock device such as a Castell Key interlock system (recommended) which ensures that:

a. the maintenance bypass switch can only be closed once the UPS has been internally transferred to the static bypass.
b. the UPS cannot internally transfer from static bypass to inverter while the maintenance bypass is closed.

The recommended Castell Key interlock system requires additional control cabling between the communications interface board in the UPS cabinet's and the Castell devices.

© Rehlko 2026

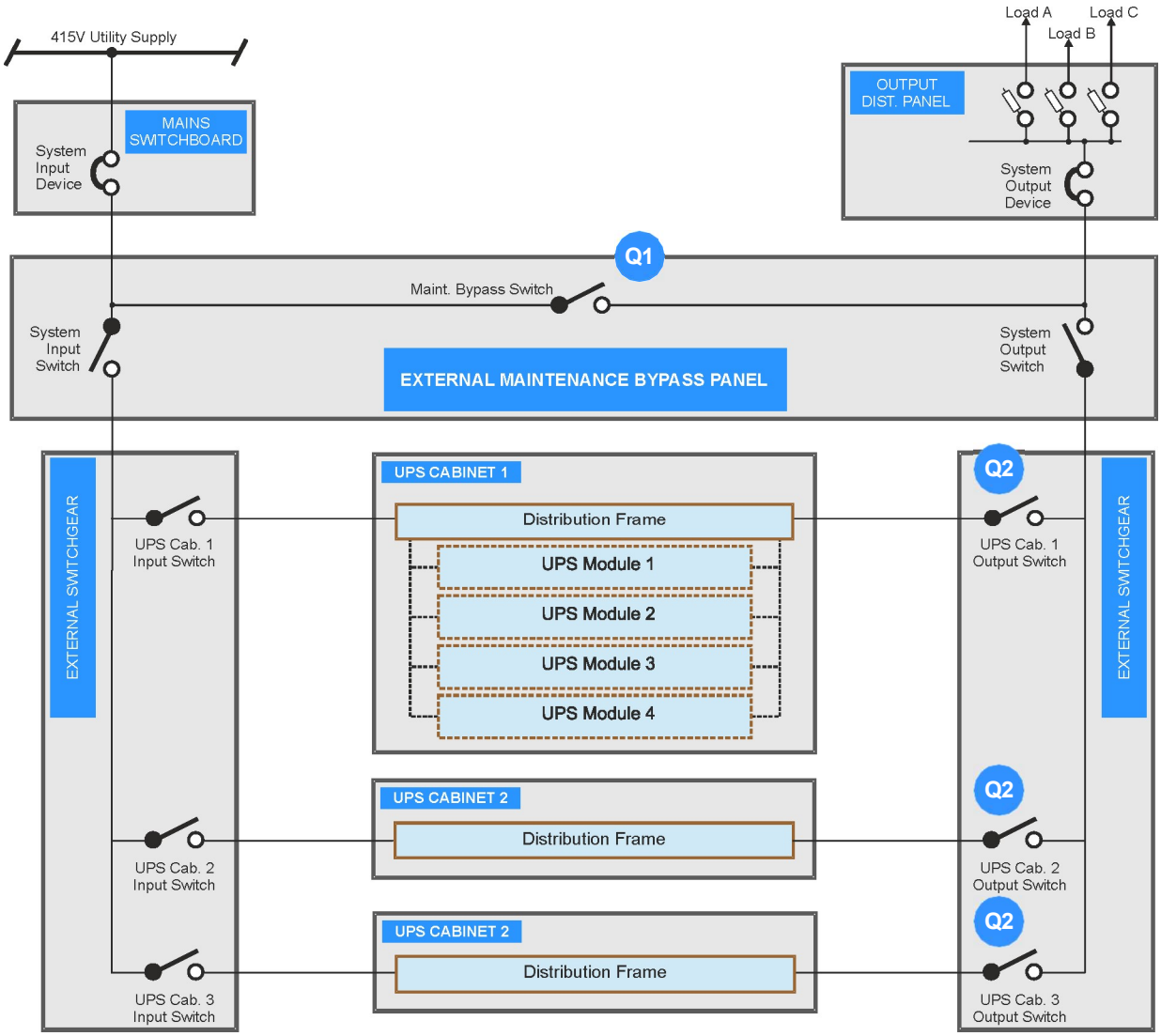

Figure 4.6 Typical wiring for a multi-cabinet system

Figure 4.6 illustrates the power cabling for a parallel-cabinet system (3 cabinets in this instance). The main difference between this and the single cabinet system shown in Figure 4.4 is that in this case each UPS cabinet is provided with a dedicated input and output power switch located on an external switchgear panel. The output switch indication (Q2) on the cabinets' control panels now monitor the individual cabinet output switches rather than the system output switch in the external maintenance bypass panel.

The switches in the maintenance bypass panel operate in exactly the same way as before and provide the means to totally isolated or bypass the UPS system; however this design also enables a UPS cabinet to be totally isolated (input and output) while the remaining cabinets remain operational.

Note: The design of the external switchgear panel(s) is bespoke to the installation. For reasons of clarity, the layout shown in Figure 4.6 shows independent switchgear panels for the UPS input and output power switches. In practice these switches can be contained in a single cabinet or switchgear panel together with the maintenance bypass switches.

Input neutral grounding

A permanently connected input neutral is required to enable the rectifier to function correctly and provide the inverter with a neutral reference when the input mains supply is unavailable and the UPS is operates from battery power.

Key Point: As the input neutral must be permanent and unswitched, a 4-pole input switch or isolator must not be used at the LV Distribution board on a TN-S system.

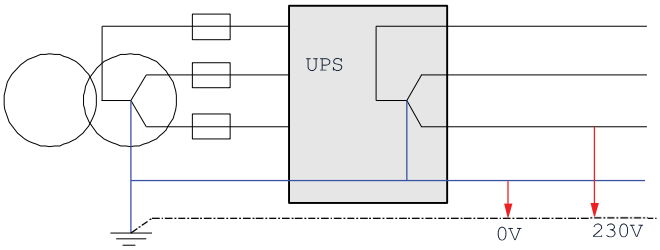

Figure 4.7 Input neutral grounding

Power cable lengths in a parallel-cabinet system

To help achieve equal load sharing between the UPS cabinets in a multi-cabinet installation, the input cables from the mains switchboard to each cabinet ideally should be of equal length. Similarly, the length of the UPS output cables to the load distribution panel should be equal.

This is depicted in Figure 4.8 for a three-cabinet parallel system, where the green cabling shows the ideal cable length arrangement.

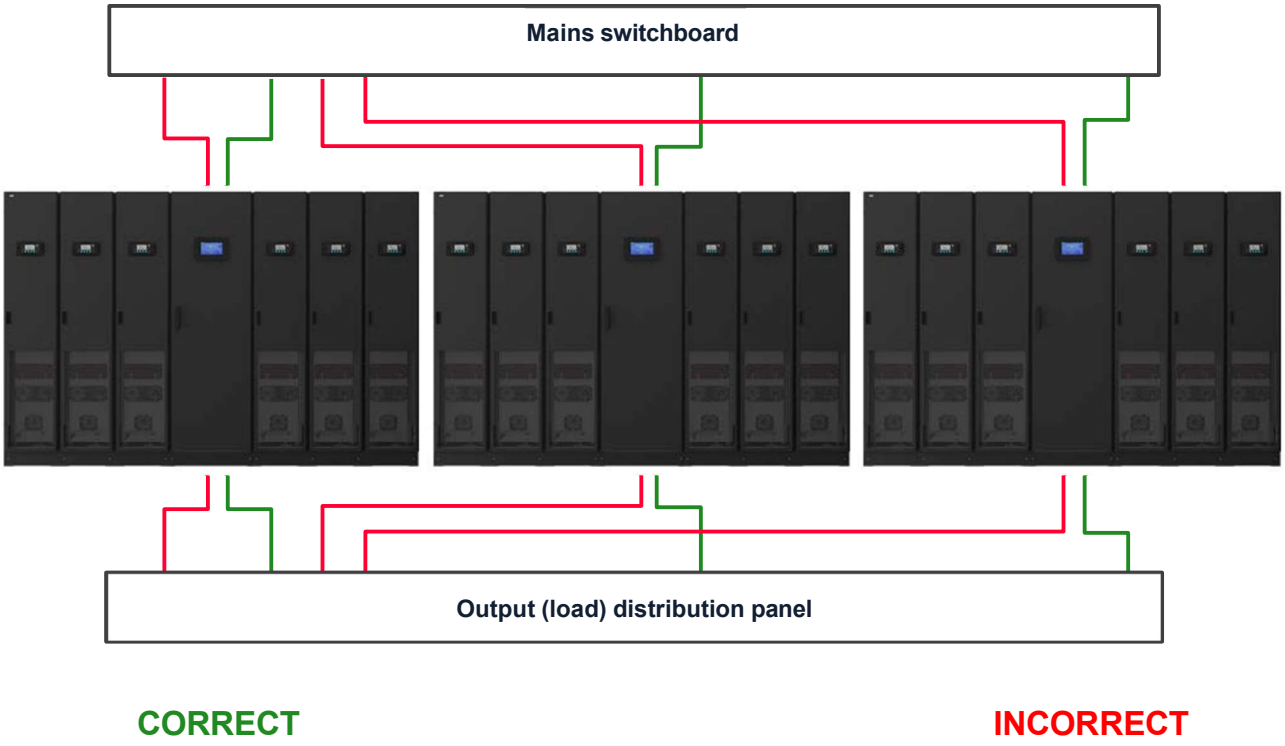

Figure 4.8 Cable lengths for parallel-cabinet configuration

4.3.2 Power cabling options

The UPS input mains, output supply and battery power cables are connected to busbars fitted in the distribution frame and fully accessible from the front of the cabinet.

The busbar connections are identified on a label attached to the inside of the distribution frame door, as shown in Figure 4.9 (TOP). Notice that there are three pairs of battery connections on both the left and right sides of the distribution frame (X501 - X506).

The cable connection busbars shown are bolted to further busbars that run across the entire lower back of the UPS cabinet to make the power connections available in each of the UPS module frames.

The battery busbars similarly pass across the back of the cabinet to the module frames but in this case the busbar connections are made using flexible busbars (flexi-bars) to allow the batteries to be connected in various configurations *(see paragraph 4.3.3)*.

The distribution frame busbar construction is shown in the lower illustration of Figure 4.9.

The AC and DC cable groups can be connected using either top or bottom cable entry and can be split so that one group enters the top of the distribution frame and the other enters the bottom. The lower illustration in

Figure 4.9 shows top cable entry for all AC and DC cables – examples of other cable entry configuration are provided in Figure 4.10 to Figure 4.13.

Note that the cable colours shown in the illustrations are:

- brown – input/output AC (L1)
- black– input/output AC (L2)
- grey – input/output AC (L3)
- light blue – neutral (N)
- green – earth (PE)
- red – battery positive (B+)
- dark blue – battery negative (B–)

CAUTION: These colours do not conform to any particular international standard and are used for illustrative clarity only.

The cover plates fitted to the top and bottom of the distribution frame can be removed to fit suitable cable glands as shown in the diagrams.

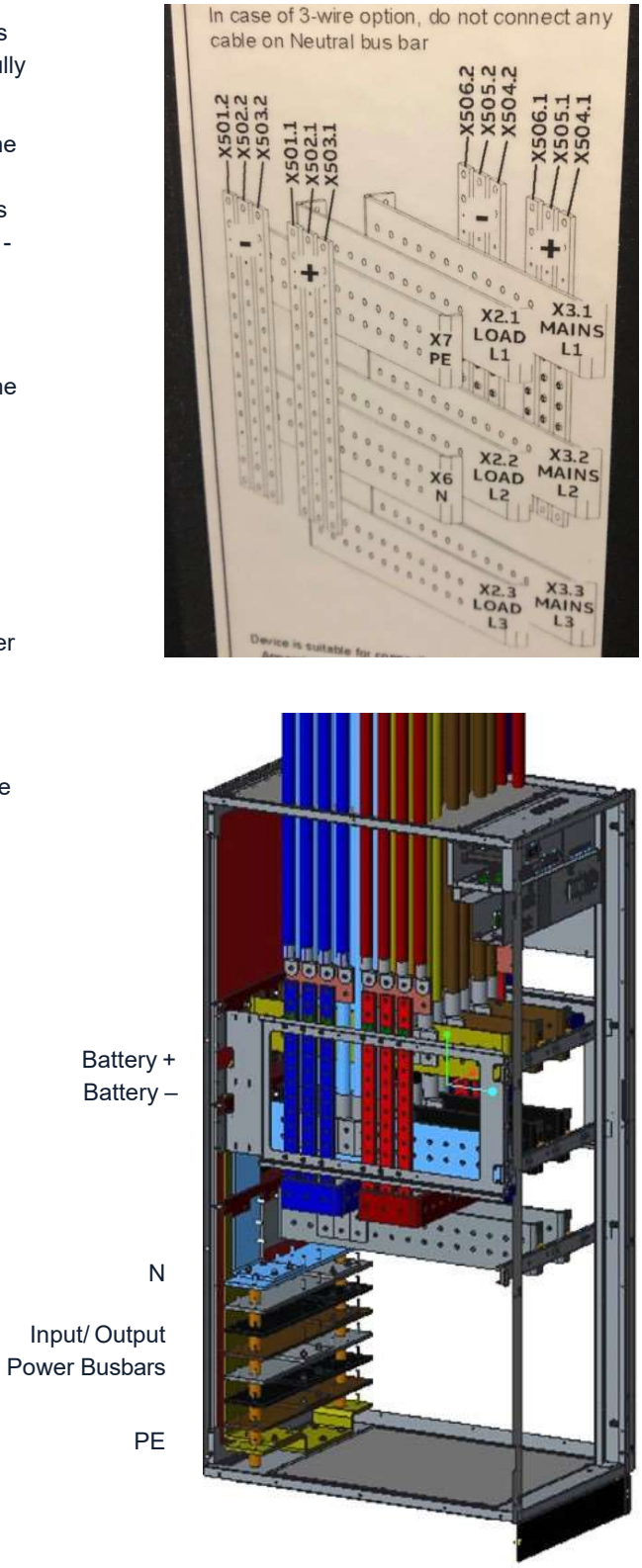

Figure 4.9 Distribution Frame power connections

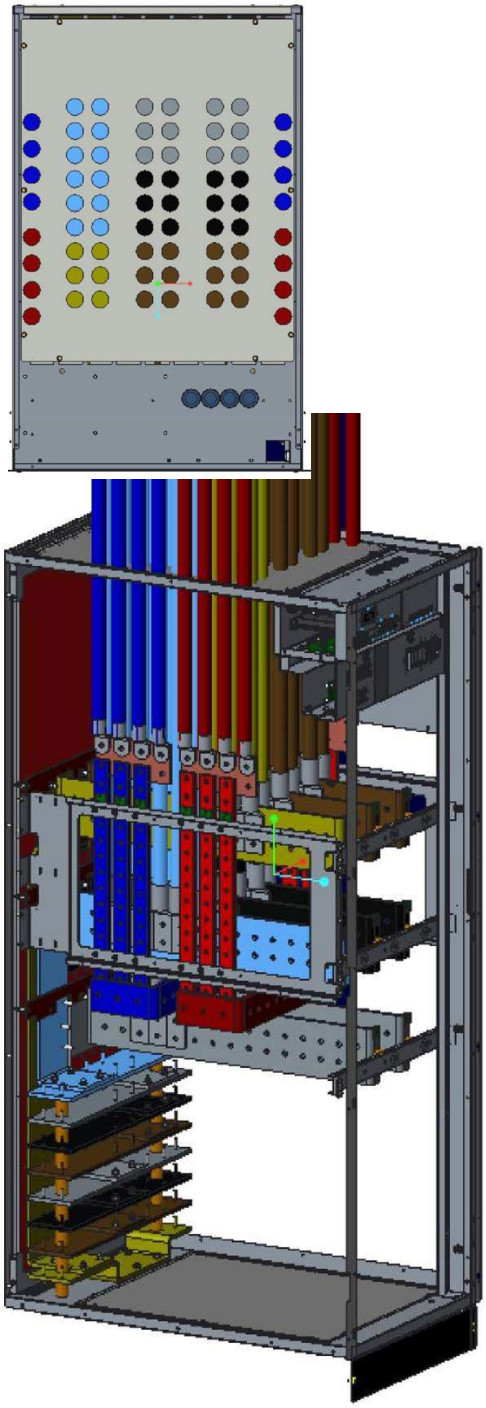

Figure 4.10 AC & DC Top cable entry

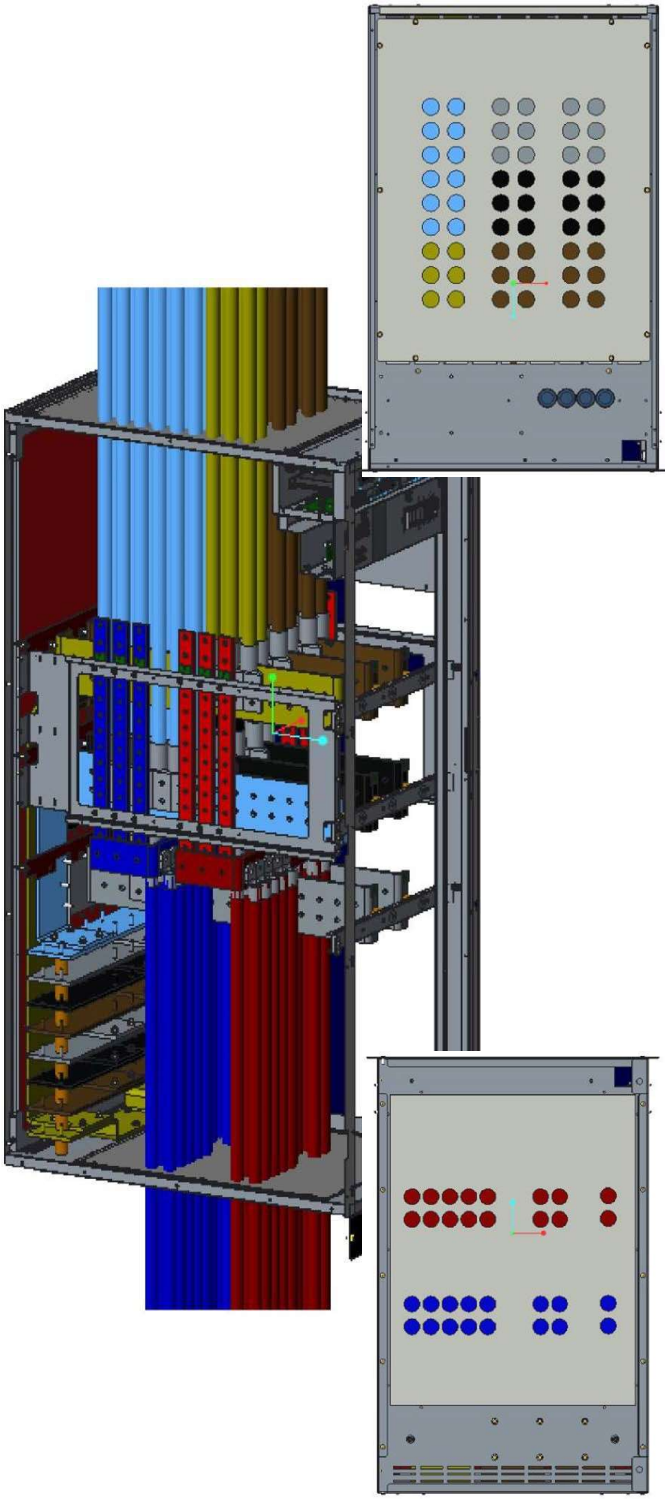

Figure 4.11 AC Top & DC Bottom cable entry

© Rehlko 2026

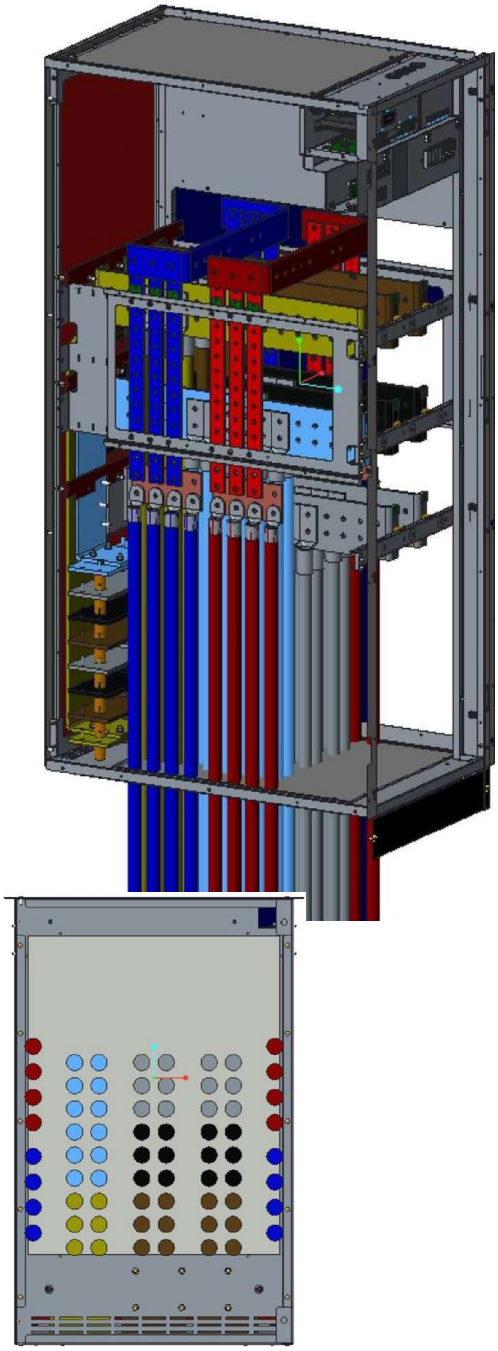

Figure 4.12 AC & DC Bottom cable entry

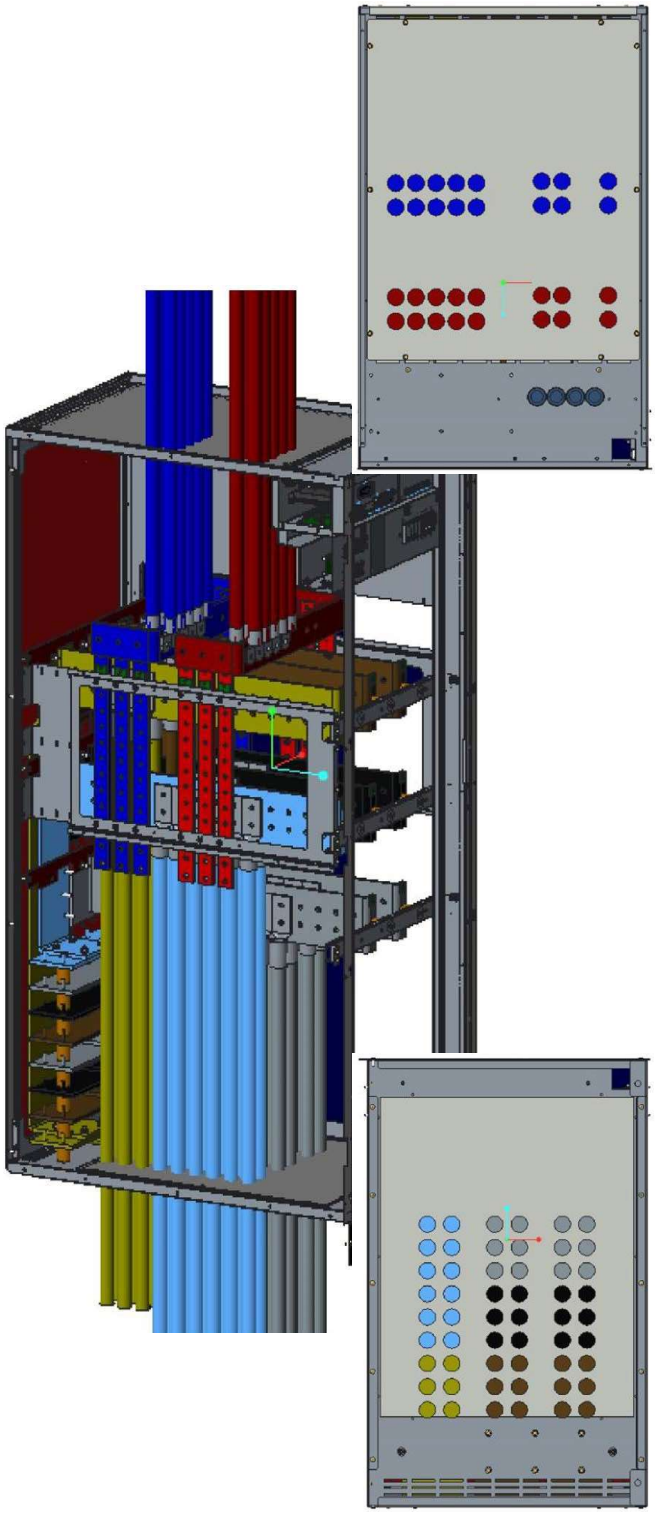

Figure 4.13 DC Top & AC Bottom cable entry

© Rehlko 2026

4.3.3 Battery configuration

The previous illustrations show three sets of battery connection busbars (red & dark blue) located on each side of the distribution frame. These busbars are connected to the modules' DC connections using flexible busbars to enable various battery configurations to be used. Two battery configurations are illustrated below – in each case the PW MF1500 DPA 1000 kW cabinet is shown at the top of the illustration and the PW MF1500 DPA 1500 kW cabinet at the bottom.

Individual batteries configuration

Figure 4.14 illustrates a plan view of the battery busbars in the distribution frame and shows the busbar annotations when connected in the 'individual battery' configuration. In this configuration each UPS module is connected to a dedicated battery string – identified as *Batt 1* to *Batt 6* in the illustration.

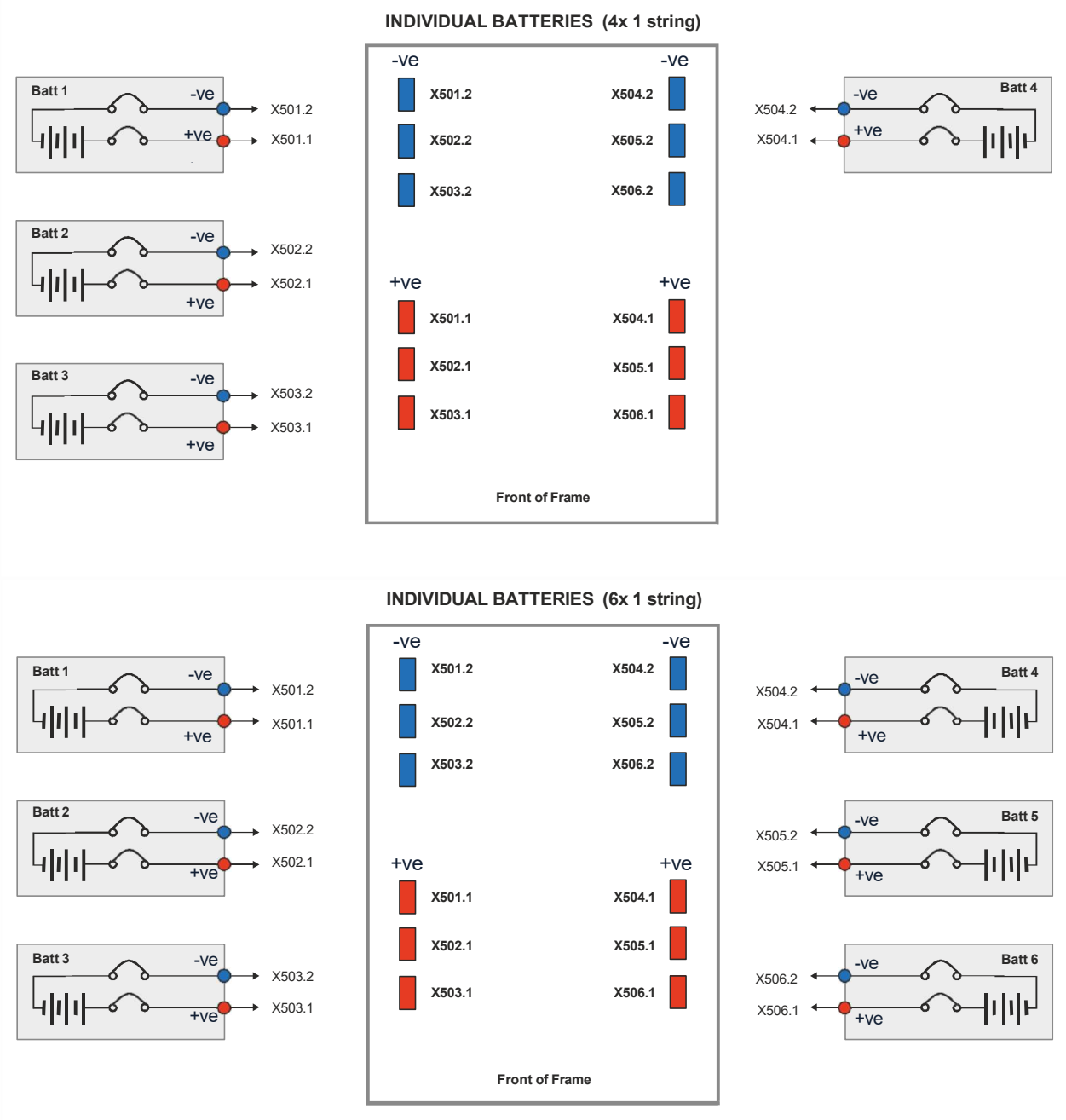

Figure 4.14 Individual battery configuration

Common battery configuration

Figure 4.15 illustrates a plan view of the battery busbars in the distribution frame and shows the busbar annotations when connected in the 'common battery' configuration.

In this configuration the battery positive and negative busbars on both sides of the distribution frame are fitted with common shorting links (busbars), as shown. Note that the link busbars can be fitted at either the top or bottom of the battery connection busbars, depending on the AC cable entry method – this can be seen in Figure 4.10 and Figure 4.12.

This allows one battery bank (*Batt 1*) to be connected to X51(+) and X52(–) which is then shared by every UPS module. Once again the battery bank can comprise a number of individually fused, parallel-connected battery strings, as shown.

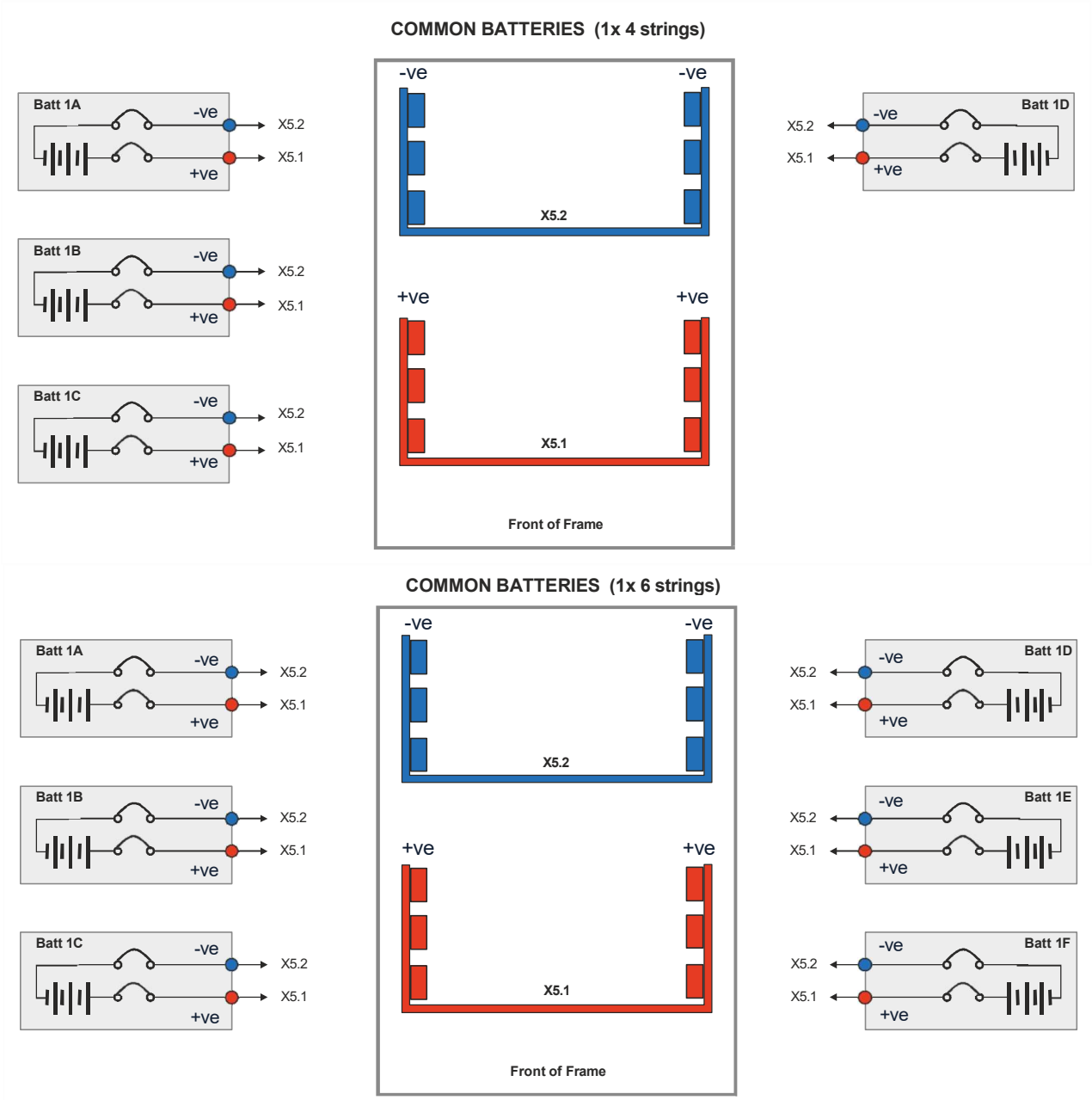

Figure 4.15 Individual battery configuration

4.3.4 Battery cabling

The DC cables and battery fuses/breakers are bespoke to the installation and the cable/fuse ratings depend on the battery type, quantity and configuration. All DC cables and fuses are provided by Rehlko, however the DC cable containment method should be taken into account when planning the UPS installation and the cables pre-laid where necessary. Rehlko will assist with any required pre-installation advice.

4.3.5 Control cables

External interface cables

A range of external interface facilities can be connected to the communications interface board which is located near the top of the distribution frame. The optional facilities offered by this board are typically used for remote monitoring and control applications applied either through a remote alarms panel, building management system (BMS) or integrated into a computer-controlled network management system. The available features are described in Chapter 9 "Options".

The interface cables enter the distribution frame via glanded holes located near the front of the frame's top cover plate. If the available access between the UPS cabinet and remote monitoring device will make it difficult to install the interface cables once the cabinet is fixed in place we recommend that the cables are laid before the cabinet is put in position, leaving a sufficient length of free cable to allow the commissioning engineer to make the necessary connections. This, however, requires a certain amount of planning with regards to the specific interface facilities that will be used.

Note: If required, the interface cables can be routed from the bottom of the cabinet through a hole located adjacent to the distribution cabinet front-right foot.

If there are no cable routing problems then the interface options can be installed at any time.

Inter-cabinet parallel control cables

In a parallel-cabinet PW MF1500 DPA system a 'parallel control bus' is facilitated by connecting a control cable between the cabinets in a 'ring' fashion, as shown in Figure 4.16.

These cables, which also enter the distribution frame via the top cover plate, fit into two RJ45 connectors located just to the right of the communications interface board (not shown). The cables are provided in the accessories pack of each UPS cabinet and will be installed by the commissioning engineer.

As the UPS cabinets are normally positioned adjacent to each other in a parallel-cabinet system there should be no problem in fitting these cables after the cabinets have been positioned: however, if the cabinets are placed between walled partitions it might be beneficial to lay the cables prior to the cabinet installation.

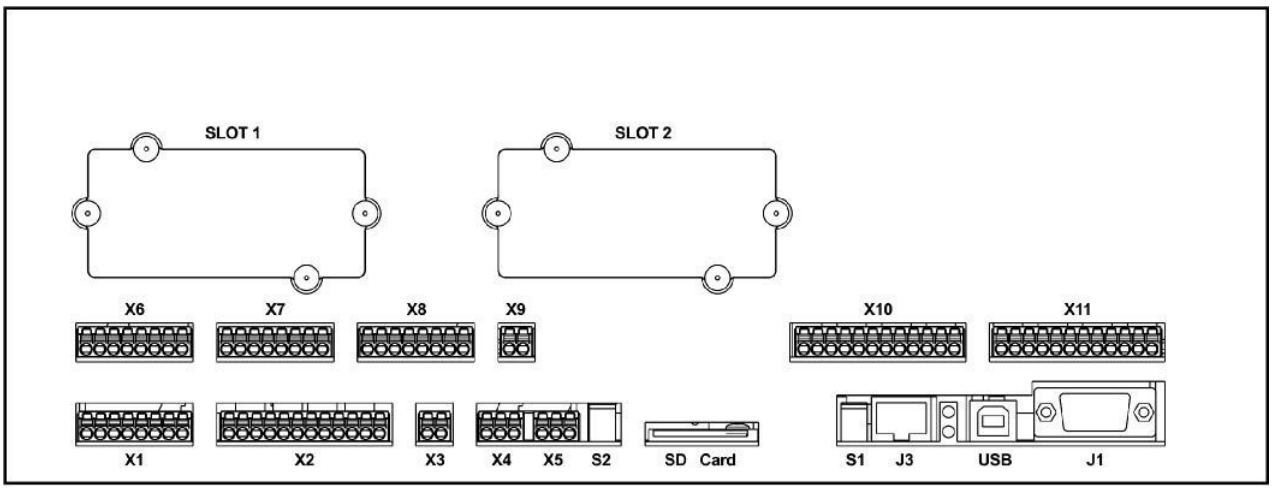

Figure 4.16 Communications interface connections

4.3.6 Fuse & cable sizing

It is the customer's responsibility to provide the external fuses, isolators and cables that are required to connect the UPS inputs and outputs to their respective power distribution switchboards.

WARNING: All external fuses, isolators and power cables must be rated and installed in accordance with the prescribed IEC standards or local regulation – e.g. BS7671.

4.3.7 Input/output supply protection

The fuse and cable sizing details given in the following table is provided for guidance only:

- The UPS must be installed to prescribed IEC or local regulations (e.g. BS7671).
- The DC cables and battery fuses/breakers are bespoke to the installation and are provided by Rehlko, and the ratings shown on the following pages are for guide reference only.
- We recommend that ALL AC power cables are sized for the full cabinet rating (1000 kW or 1500 kW) even if the cabinet is not fully populated with UPS modules initially. This will allow the system to be expanded to include the full complement of modules at a later date without having to shut down the system for re-cabling.
- Rather than specify cable sizes, the following table provides the maximum input and current requirements. Cables should be sized in accordance with local regulation.

Table 4.1 Maximum current ratings to be used for cable sizing

UPS Module Rating (kVA)	1000 kW	1500 kW
Recommended rectifier input fuse (gL) or 3-pole MCCB (System input device)	1600A	2500A
Rectifier input cable maximum demand (@400V with battery charging) (L1, L2, L3, N)	1679A	2518A
Recommended UPS output fuse (gL) or 3-pole / 4-pole MCCB (System output device)	1600A	2500A
UPS output cable maximum demand (@400V) (L1, L2, L3, N)	1450A	2174A
Recommended Earth cable sizing (PE)	4x 185 mm² or 3x 300 mm²	4x 185 mm² or 3x 300 mm²
Battery cables (X5) – provided by Rehlko Ltd..	–	–

© Rehlko 2026

5. Installation Procedure

5.1 Introduction

This chapter contains essential information concerning the unpacking, assembly, positioning and cabling of the PW MF1500 DPA UPS system. Please also read through Chapter 4 "Installation Planning" before you begin the installation process as it contains key information regarding the UPS installation requirements.

Key Point: The UPS batteries are contained in an external cabinet or battery rack. This chapter does not include details for installing the battery containment system. Always refer to the installation manual provided by the supplier of the battery system for appropriate battery cabinet/rack installation details.

WARNING: The customer installation team should not install the batteries or connect the DC cables between the UPS cabinet(s) and battery system. This MUST be carried out by a Rehlko trained engineer and is usually completed during commissioning.

WARNING: Once the UPS equipment is installed it must be commissioned by an engineer approved by Rehlko BEFORE it is powered-up. Rehlko will take no responsibility for any personal injury or material damage caused by the application of electrical power to any part of the UPS equipment before it has been fully commissioned and handed over to the customer.

WARNING: All cabling operations must be supervised by an authorised electrician or other suitably qualified person. All installation procedures must be carried out in strict accordance with the instructions contained in this manual. Rehlko will take no responsibility for any personal injury or material damage caused by the incorrect installation, cabling or operation of this product.

5.2 Taking receipt of the UPS

The UPS cabinet and accessories are delivered on purpose-designed pallets that are easy to off load and move using a forklift or hoist.

CAUTION: *Observe the following precautions when off-loading and moving the UPS:*

- *Do not remove the UPS packaging before it is moved to its final destination.*
- *Always keep the packages in an upright position, do not tilt by more than 10° when handling.*
- *Take note of the Centre of Gravity marker on the side of the package when lifting.*
- *Do not stack the pallets.*

The UPS cabinet and other system components are shipped in cardboard or wooden containers that are designed to protect against mechanical and environmental damage. Further protection is provided by wrapping the equipment with a plastic sheet.

Upon receiving the UPS you should immediately examine the packing container for any obvious signs of physical damage. External 'TiltWatch' and 'ShockWatch' indicators (2 off) will display RED centres if the equipment has been tilted or dropped during transportation.

Before you accept the shipment you should ensure that the received packages correspond to the description shown in the delivery documentation. Note that some ordered optional equipment packages might be shipped inside the UPS cabinet distribution frame.

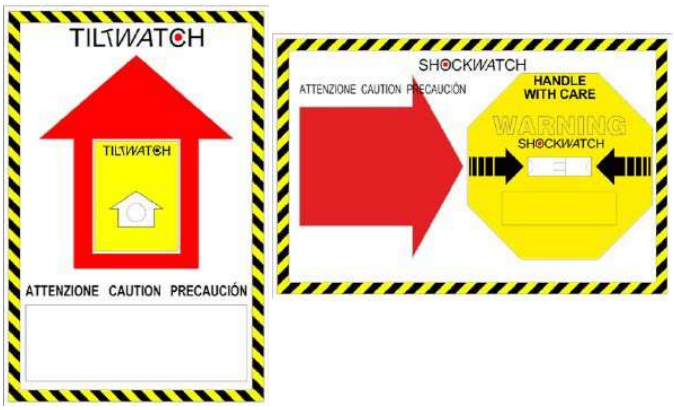

Figure 5.1 'Tiltwatch' and 'ShockWatch' indicators

The UPS system is shipped in several packages:

- The PW MF1500 DPA 1500kW cabinet is shipped in two halves that must be bolted together. A frame interconnection kit is shipped inside the distribution frame.
- The cabinet is shipped with the modules installed.
- A module extraction slider, which is required to extract and insert the UPS modules, is shipped in a separate package.
- The UPS batteries are shipped from the battery supplier in purpose-made containers.

5.2.1 Reporting transportation damage

WARNING: If the TiltWatch/ShockWatch indicators indicate that the equipment has been tilted or dropped in transit DO NOT connect the equipment to the mains electricity supply.

You must inform the carrier and Rehlko immediately if the TiltWatch/ShockWatch indicators are red, or there are other signs of suspected transportation damage.

Claims for shipping damage must be filed immediately when found, and the carrier must be informed of ALL claims within seven days of receipt of the equipment. Do not unpack the equipment if the packaging has been damaged.

If the equipment is to be stored for longer than seven days before it is installed you should unpack it and inspect it for signs of internal damage before you put it into storage. Note that any optional equipment packages that are shipped inside the UPS cabinet should also be unpacked and inspected.

If the equipment is found to be damaged you should store the packing materials for further investigation.

5.2.2 Local transportation

Please observe the following precautions when you transport the UPS equipment after it has been off-loaded.

CAUTION: *Local transportation:*

- *When using a forklift or pallet jack to move the UPS cabinet on its pallet, ensure that the forks are fully inserted through the bottom of the pallet to lift the cabinet securely and prevent it from toppling over.*
- *Take note of the Centre of Gravity marker on the side of the package when lifting.*
- *When lifting, do not at any time tilt the cabinet by more than 10° from vertical.*

WARNING: Potential dangers:

- *If tilting occurs at any stage do not connect the UPS to the mains electrical supply.*
- *The cabinet weight can cause serious personal injury and/or structural damage to the surrounding area if it is dropped in transit. Always take extreme care when moving the equipment.*

5.2.3 Storage

UPS Cabinet

If you plan to store the UPS cabinet prior to use it should be held it in a clean, dry environment with a temperature between

-25°C to +70°C and RH <95% (non condensing). An ideal storage temperature is between +20°C to +25°C. The UPS should be stored in its original packing and shipping carton. If the packing container is removed you must take measures to protect the UPS from the ingress of dust and moisture.

Battery

Battery life depends very much on the ambient temperature and it is important to follow the storage instructions and recommendations of the battery manufacturer. It is also important not to store the batteries for longer than 6 months at 20°C, 3 months at 30°C, or 2 months at 35°C storage temperature without fully recharging them.

For longer term storage the batteries should be fully recharged every 6 months @ 20°C.

© Rehlko 2026

CAUTION: *Sealed batteries must never be stored in a fully or partially discharged state. Extreme temperature, under-charge, overcharge or over-discharge will destroy batteries!*

- *Fully charge the battery both before and after storing.*
- *Always store the batteries in a dry, clean, cool environment in their original packaging.*
- *If the packaging is removed protect the batteries from dust and humidity.*

5.3 Unpacking

Removing the module extraction slider packaging *(see Figure 5.2)*

A module extraction slider is required to insert or remove a UPS module from the cabinet frame.

1. Unpack the module extraction slider following the illustrations in Figure 5.2.

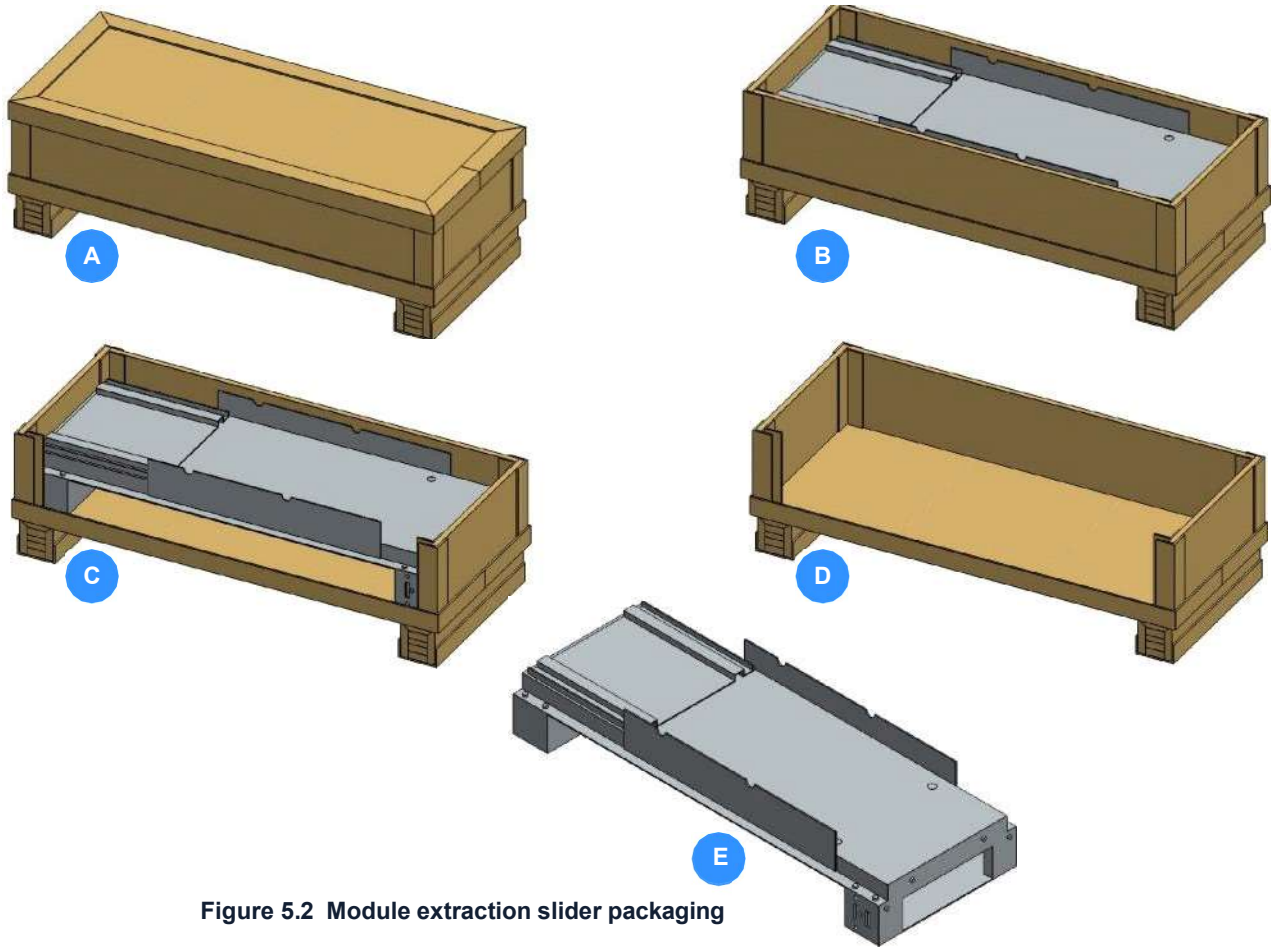

Figure 5.2 Module extraction slider packaging

Removing the standard UPS cabinet packaging *(see Figure 5.3)*

Note: Store the packaging for later use in case the cabinet has to be returned

1. Cut and remove the two straps that secure the packaging box in place.
2. Remove the top cover (A).
3. Remove the two short side covers (B) by sliding them upwards (C).
4. Remove the two long side covers (D) by removing the nails/staples securing the side covers to the baseplate (E).
5. With all the packing materials cleared, raise the cabinet using suitable lifting aids (forks/pallet jack) and withdraw the shipping pallet wooden base.
6. Remove the frame interconnecting kit package from the distribution frame of the PW MF1500 DPA 1500kW cabinet.
7. Lower the cabinet to the floor and remove the lifting equipment.

© Rehlko 2026

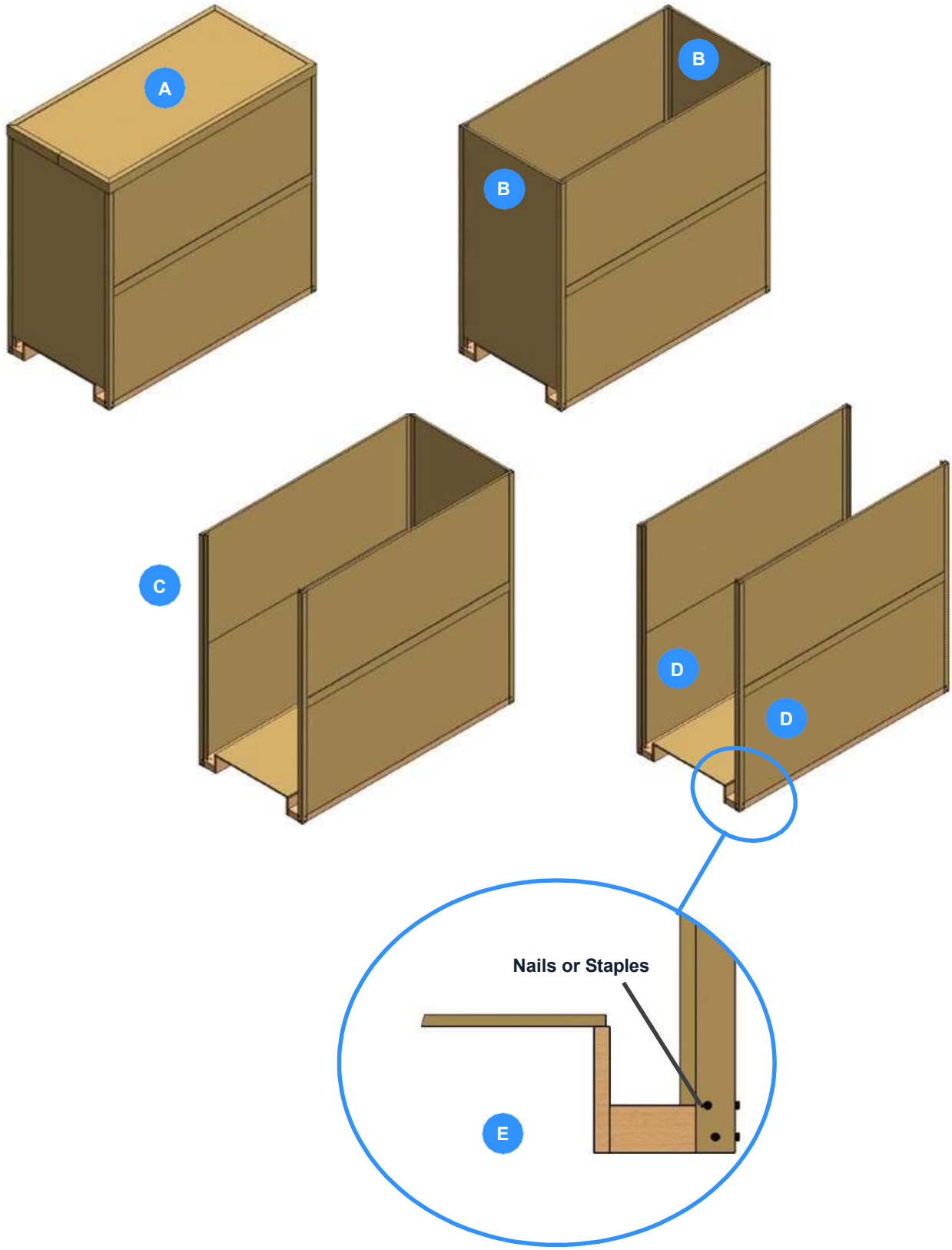

Figure 5.3 Unpacking the UPS cabinet (standard packaging)

© Rehlko 2026

5.4 1500 kVA Cabinet installation

Key Point: The PW MF1500 DPA1500 kVA cabinet is shipped in two containers as shown in Figure 5.5. The two cabinet halves must be joined together using components from the installation kit that is shipped inside the cabinet distribution frame *(see Figure 5.4)*.

WARNING: This procedure must be performed or supervised by a service engineer trained by Rehlko or one of its service agents.

WARNING: This procedure requires handling heavy components that can cause injury if not done correctly.

Key Point: A rear clearance of 600 mm is required in order to reassemble the cabinet. Once the reassembly is complete the cabinet can then be moved against a wall (0 mm clearance) if required.

5.4.1 Cabinet installation kit

The cabinet installation kit is shipped in a box inside the distribution frame.

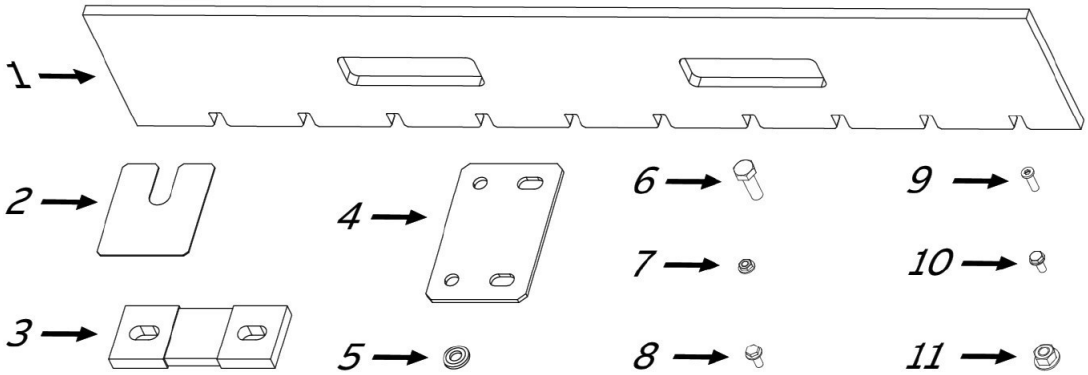

No.	Qty	Description
1	1	Power busbar alignment tool
2	24	Levelling shims
3	16	M41_0335 Flexible busbar
4	2	M4_0137 Junction metal plate
5	6	M8 Conical washer
6	6	M8 x 25 mm Bolt

No	Qty.	Description
7	5	M5 Nut
8	8	M5 x 12 mm Bolt
9	4	M5 x 16 mm Torx screw
10	18	M5 x 12 mm Self threading screw
11	32	M8 Nut

Figure 5.4 Cabinet installation kit

© Rehlko 2026

5.4.2 Joining the cabinets

1. Ensure that all packaging materials have been removed.
2. Move the two cabinet frame assemblies as close as possible to their intended final location and position them adjacent to each other on level ground *(see Figure 5.5)*. Allow at least 600 mm rear access to enable the reassembly.

Note: The two halves of the cabinet are identified as 'Frame A' and 'Frame B' in the following procedure.

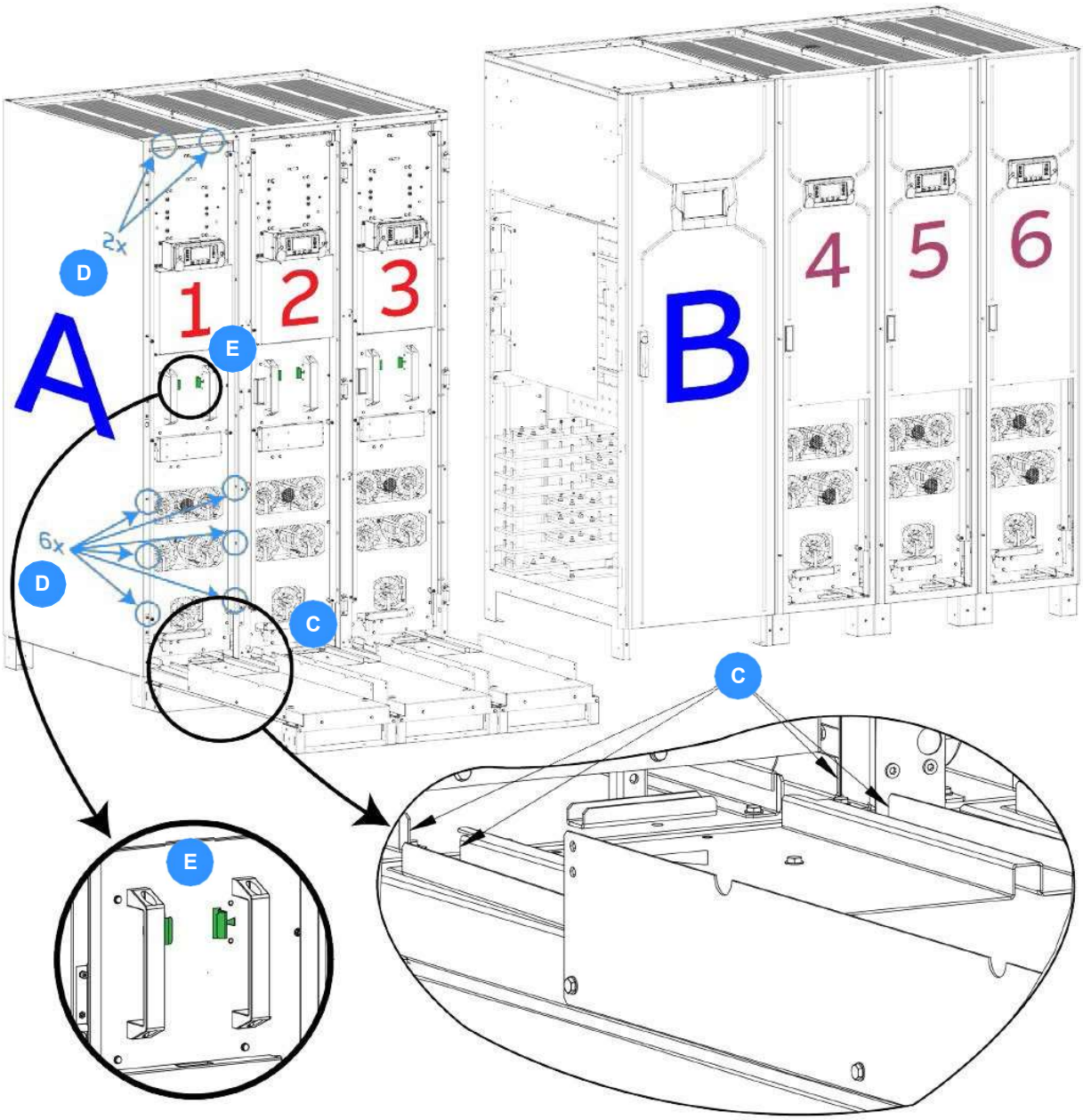

Figure 5.5 Module extraction

Key Point: Unless otherwise stated, ALL fixings should be tightened to a torque of 3.5Nm (min) to 5Nm (max).

3. Remove all three of the UPS modules (if fitted) from Frame A as follows:
   a. In Frame A, place a module extraction slider in front of the UPS module with the runners on the top of the slider aligned to the runners in the module's frame, as shown in Figure 5.5 (C).
   b. Remove the 8 screws securing the UPS module to the cabinet frame, as shown in Figure 5.5 (D).
   c. Ensure that the UPS module power locking handle is in the 'unlocked' position – fully towards the right hand side – as shown in Figure 5.6 (A).
   d. Unlock the UPS module from the frame by pressing sideways on the two yellow tabs located between the UPS module handles, as shown in Figure 5.5 (E) (shown green in the illustration for reasons of clarity).
   e. Whilst holding the two locking mechanism tabs pressed inwards, use the handles on the front of the UPS module (Figure 5.5 (E)) to withdraw the UPS module onto the module extraction slider between the guide rails.
   f. Secure the UPS module to the module extraction slider using 4x self threading screws (M5 x 12 mm) on each side, as shown in Figure 5.7 (A), then move the slider + module clear of the cabinet using a pallet trolley.

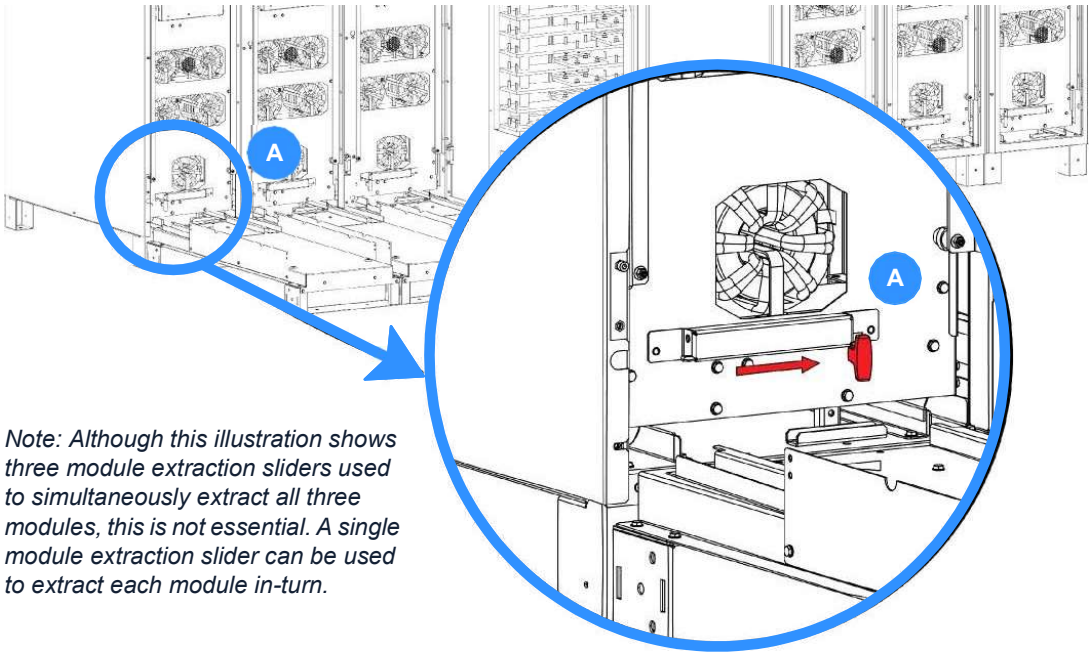

Note: Although this illustration shows three module extraction sliders used to simultaneously extract all three modules, this is not essential. A single module extraction slider can be used to extract each module in-turn.

Figure 5.6 UPS Module power locking handle

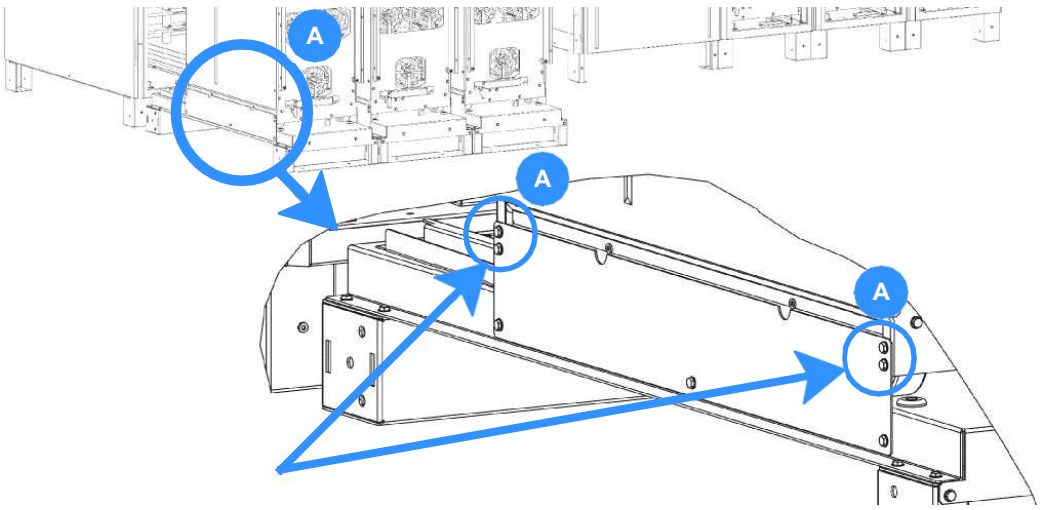

Figure 5.7 Module extraction slider securing screws

4. Move the Frame A so that it is adjacent to Frame B. *(see Figure 5.8)*, taking care not to trap the control cables at the top of Frame A between the frames – see Figure 5.13 (C).
5. Ensure the two frame are correctly aligned.
6. Use a spirit level to ensure that the two frames are level. If necessary, place levelling shims (C) below the feet of the frames to ensure that the frames are level before the frames are joined. The shims are supplied as part of the cabinet installation kit.

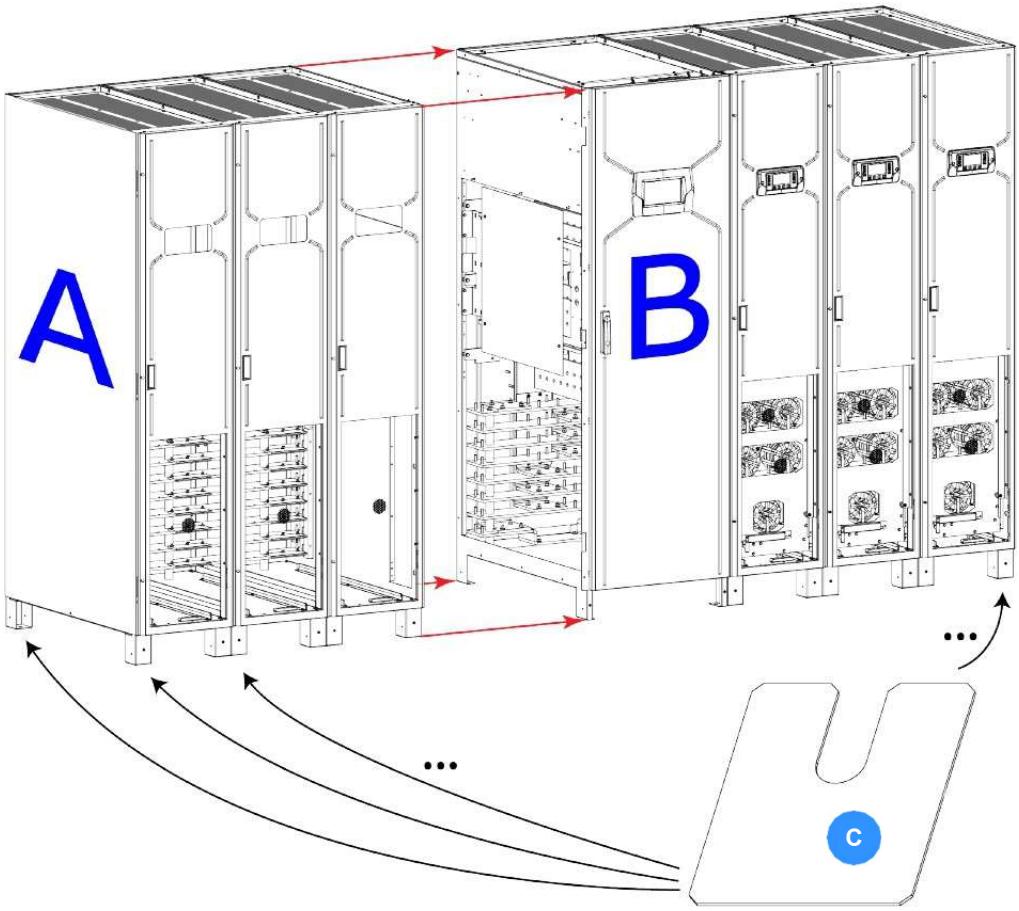

Figure 5.8 Cabinet alignment

7. Connect the 'right' foot on the front of Frame A to the 'left' foot of the front of Frame B using an M5x 12mm nut and bolt (supplied). *(see Figure 5.9)*
   Tighten to a torque of 3.5Nm (min) to 5Nm (max).
8. Repeat the same operation with the two feet on the back of the frames.

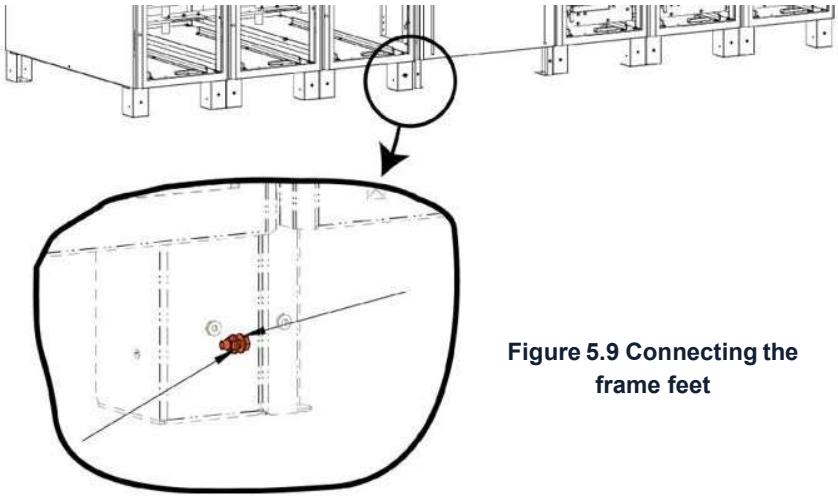

Figure 5.9 Connecting the frame feet

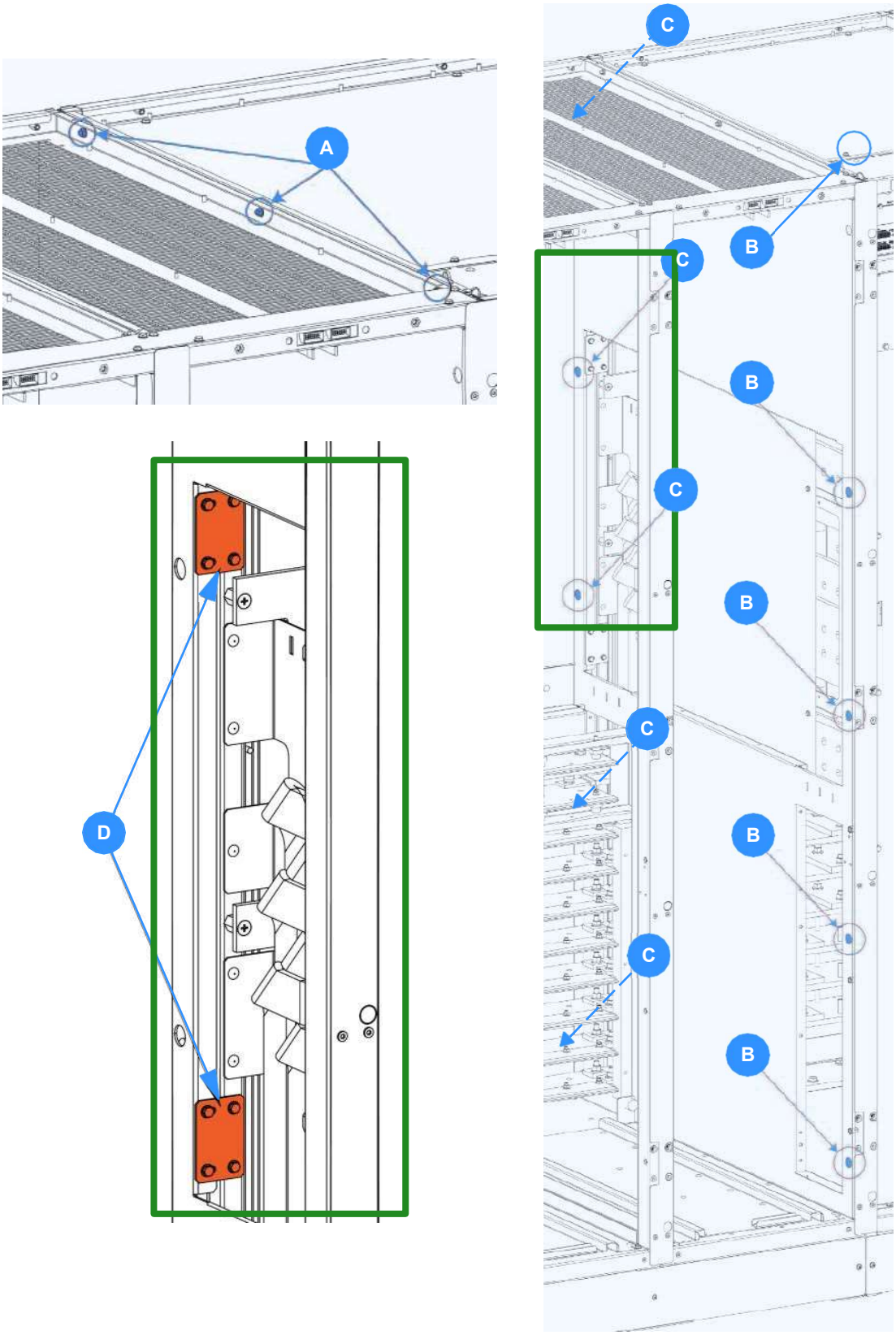

Figure 5.10 Connecting the frames

9. Connect together the adjoining frame front pillars using five M5x12mm self-threading bolts (supplied,) as shown in Figure 5.10 (B).
10. Connect together the adjoining frame back pillars using five M5x12mm self-threading bolts (supplied), as shown in Figure 5.10 (C).
11. Fit two junction metal plates to the inside plane of the adjoining frame back pillars and secure in place using eight M5x12mm self-threading bolts (supplied), as shown in Figure 5.10 (D).
12. Fit three M5x12mm bolts (supplied) through Frame B to secure it to Frame A, as shown in Figure 5.11 (A).
13. Connect the front metal plate of the Frames A and B using eight M5x16mm torx screws, as shown in Figure 5.11 (C).
    a. *Note: 4 bolts are already installed in the frame, use the other 4x torx screws to fix together the two frames.*

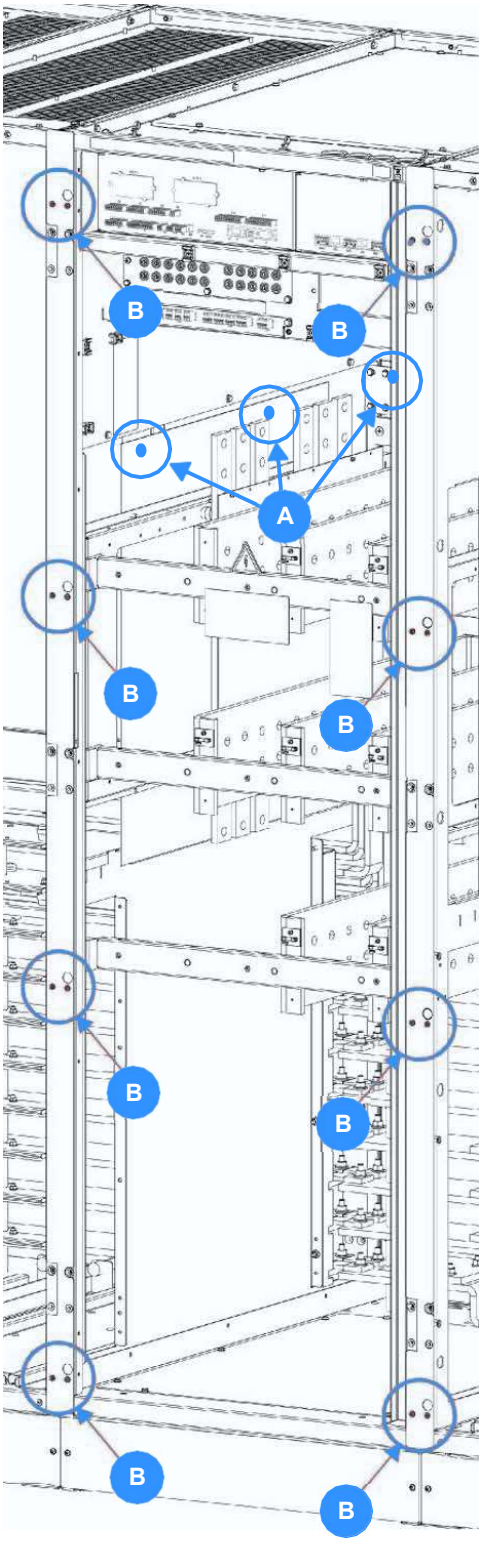

Figure 5.11 Connecting the frames

5.4.3 Connecting the busbars

1. From the back of the cabinet, insert 16x flexible busbars links between the power busbars in Frame A and Frame B, as shown in Figure 5.12 (A).
2. Secure the flexible busbars using 32x M8 nuts (supplied) but do NOT tighten them.
3. Once all the nuts are fitted, tighten them in turn to a torque of 12Nm (min) to 14Nm (max).
4. Access the battery busbars in Frame B by removing the 4x screws that secure the red safety cover, as shown in Figure 5.13 (A), then remove the safety cover.
5. Connect the flexible DC busbars emerging from the back of Frame A (Figure 5.13 (B)) to the vertical battery busbars in Frame B.

   Figure 5.14 shows connection details:
   A = Fixed DC busbars in Frame B.
   B= Flexible DC busbars from Frame A

6. Refit the red safety cover – Figure 5.13 (A).

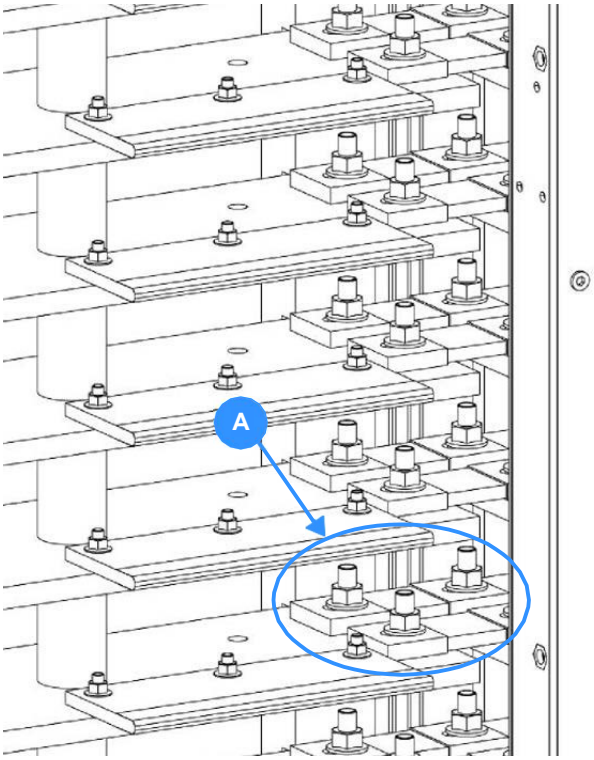

Figure 5.12 Flexible busbars (AC)

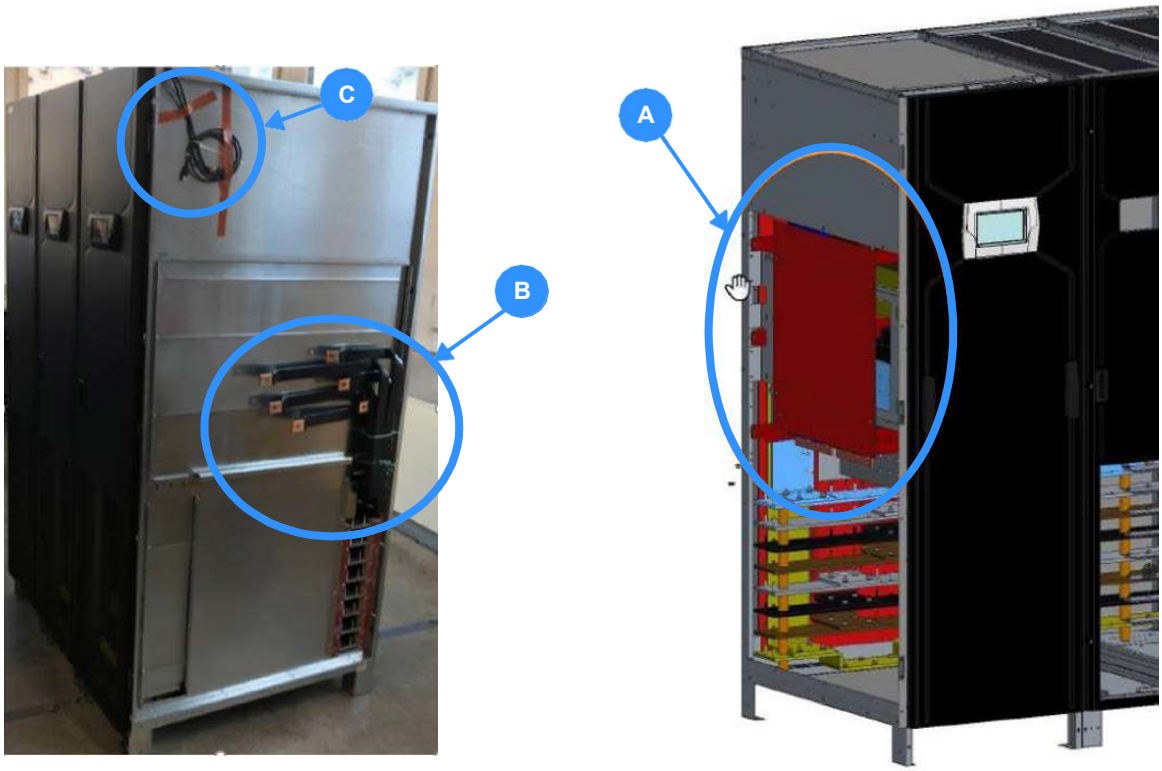

Figure 5.13 Flexible busbars (DC)

5.4.4 Connecting the control cables

1. The two parallel bus control cables emerging from Frame A, shown in Figure 5.13 (C), must be connected to the communications interface board located at the top front of the distribution frame in Frame B.
2. Open or drill the cable glands on the top of the distribution frame.

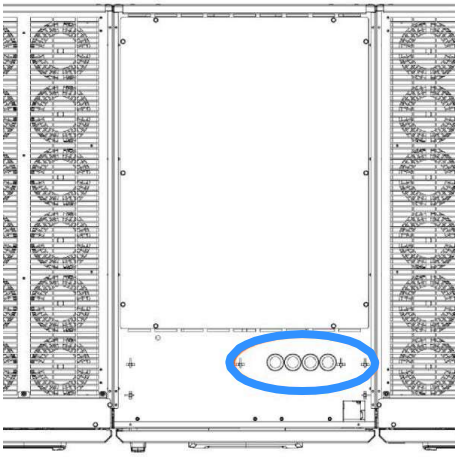

Figure 5.15 DC Busbar connections

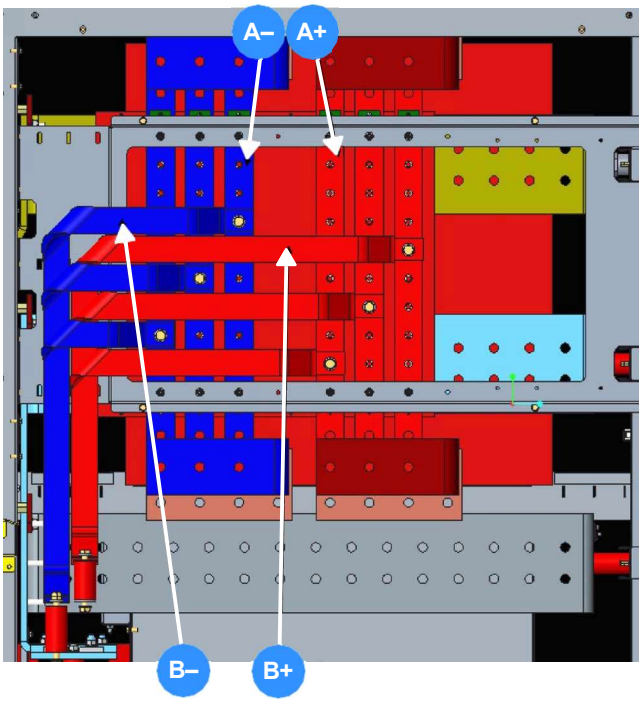

Figure 5.14 DC Busbar connections

3. Lay the parallel cables JR1 and JR2 across the top of the cabinet and route them through the cable glands near the front of the distribution frame (see Figure 5.15).
4. Remove the cover in front of the communications interface board, connect the cables to JR1 & JR2 as shown in Figure 5.16, then refit the cover.

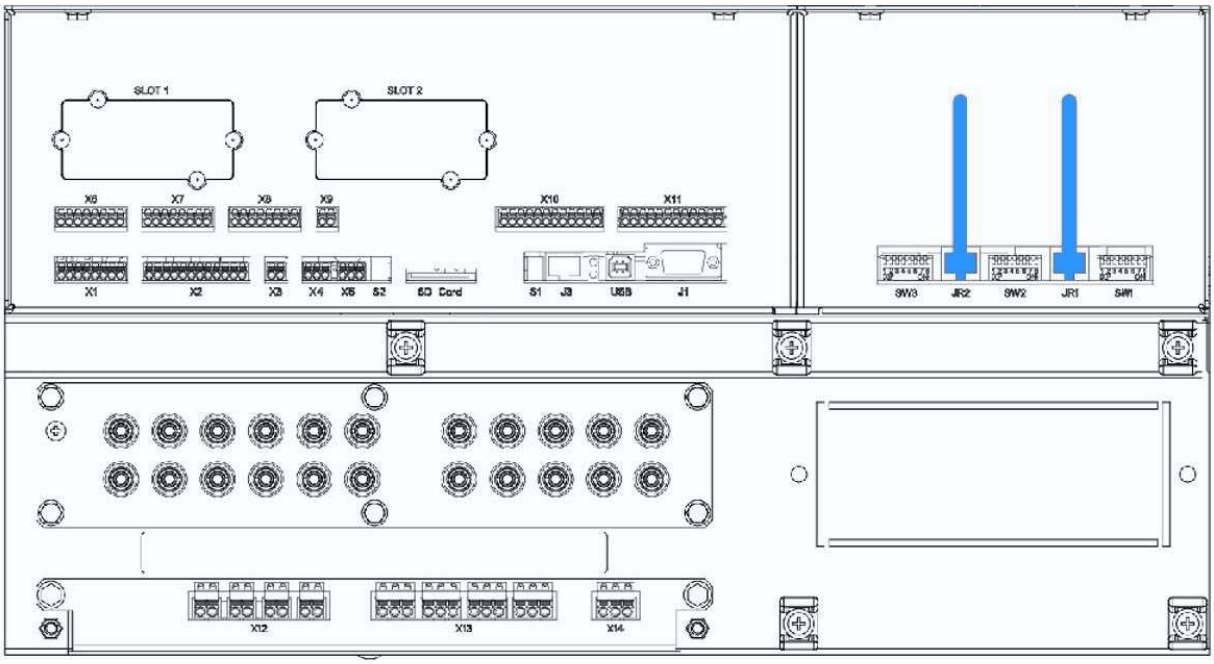

Figure 5.16 Customer interface board

5.4.5 Final positioning

1. Once Frames A & B, power busbars and the parallel bus control wiring are connected, the cabinet can be moved to its final position using two forklifts or pallet trolleys inserted into the cabinet front.

Key Point: If the cabinet is to be secured to the floor ensure that the holes in the cabinet feet align accurately with any prepared fixings.

2. When the cabinet is in its final position use a spirit level to ensure that it is level. If necessary, insert levelling shims below the cabinet feet (see Figure 5.8).
3. If applicable, secure the cabinet in place using suitable fixings *(see paragraph 4.2.3 on page 39)*.

5.4.6 Refit the UPS modules

Note: The UPS modules should be inserted in the reverse order that they were removed (i.e. the module closest to the centre of the cabinet should be fitted first). In this example the modules should be refitted in the order of module 3, module 2 then module 1. – see Figure 5.5.

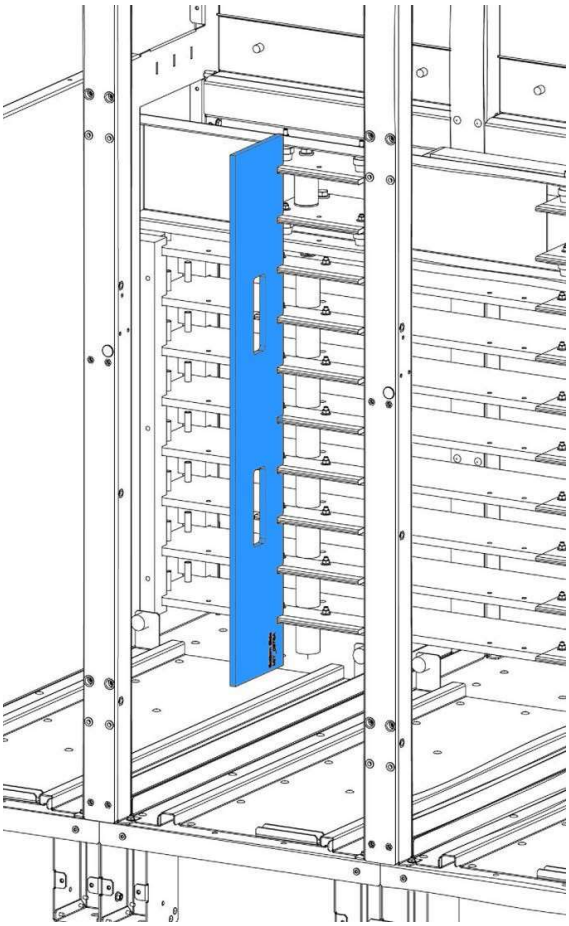

1. Before inserting the power modules, verify the alignment of the power busbars in each power module frame using the power busbar alignment tool, as shown in Figure 5.17.
2. Fit the UPS modules in turn, as follows:
   a. Using a forklift or pallet trolley, position the UPS module, attached to the module extraction slider, squarely in front of the vacant module frame.
   b. When the extraction slider is aligned with the module frame remove the 4x self threading screws (M5 x 12 mm) securing the UPS module to the each side of the slider – Figure 5.7 (A).
   c. Ensure that the UPS module power locking handle is in the ‘unlocked’ position – fully towards the right hand side – as shown in Figure 5.6 (A).
   d. Whilst holding the two yellow locking mechanism tabs pressed inwards, use the handles on the front of the UPS module (Figure 5.5 (E)) to insert the UPS module onto the module extraction slider between the guide rails.
   e. When the UPS module is fully inserted, the two yellow locking mechanism tabs should lock it into the frame. *Note: When inserting the module ensure sure that the fixed parallel bus connectors at the front top edge have completely entered the appropriate guides.*
   f. Fit the 8 screws securing the UPS module to the cabinet frame, as shown in Figure 5.5 (D).
   g. Lift the yellow safety lock to release UPS module locking bar then move the power locking handle to the ‘locked’ position – fully towards the left hand side, Figure 5.6 (A)..
   h. Remove the module extraction slider from the front of the frame.
3. When all the UPS modules have been inserted the mechanical installation is complete and electrical installation can commence.

5.5 1000 kVA Cabinet installation

Unlike the larger 1500 kVA cabinet, the 1000 kVA cabinet is shipped fully assembled and requires no preparation before it is mechanically installed.

Key Point: The 1000 kVA cabinet can be configured with the distribution frame on the left or right of the UPS frames. The configuration must be stipulated at the time of order as it cannot be changed on-site.

WARNING: This procedure must be performed or supervised by a service engineer trained by Rehlko or one of its service agents.

5.5.1 Final positioning

1. Move the cabinet to its final position using a forklift or pallet trolley from the front.

Key Point: If the cabinet is to be secured to the floor ensure that the holes in the cabinet feet align accurately with any prepared fixings.

2. When the cabinet is in its final position use a spirit level to ensure that it is level. If necessary, insert levelling shims (provided) below the cabinet feet (see Figure 5.8).
3. If applicable, secure the cabinet in place using suitable fixings *(see paragraph 4.2.3 on page 39)*.
4. When the cabinet is fully secured the mechanical installation is complete and electrical installation can commence.

5.6 Electrical installation

5.6.1 Safety notes

Please ensure you read and understand the following safety notes before you begin the UPS electrical installation.

1. Do not connect any power cables before the UPS mechanical installation is fully completed.
2. All cables must be installed and connected by a qualified electrician.
3. Do not connect power cables to the UPS if there is water or moisture present.
4. Do not connect the battery system. This must be done by the commissioning engineer.
5. Before you work on the UPS power cables or terminals, you must familiarise yourself with the location and operation of the mains power sources intended to be connected to the UPS system and ensure that they are externally isolated and 'locked-out' at their respective power distribution switchboards. Warning notices should be posted to prevent any inadvertent operation of the external supply isolators.
6. If an external maintenance bypass facility is used you should familiarise yourself with its operation and its input/output power connections as these will determine the source and destination of the UPS input and output power cables. An external maintenance bypass facility is bespoke to the installation site, so no connection details are provided here.
7. Ensure that the external fuses and cables (provided by the customer) are suitably rated in accordance with the prescribed IEC standards or local regulations – for example BS7671.
8. When the electrical installation is complete the UPS system must be commissioned by an engineer authorised by Rehlko before it is powered up and brought into use.

WARNING: Do not apply electrical power to the UPS before it has been commissioned.

1. When installing the UPS cables ensure that the connection procedures are performed under the following conditions:
   a. No mains voltage is present at the UPS mains switchboard terminals.
   b. All loads are shut down and isolated at the external output (load) distribution panel.
   c. The UPS is fully shut down and voltage-free.
   d. The external maintenance bypass isolators are all open (OFF) (where fitted).

5.6.2 Power cable connections

The UPS input mains, output supply and battery power cables are connected to busbars fitted in the distribution frame and fully accessible from the front of the cabinet.

The AC and DC cable groups can be connected using either top or bottom cable entry and can be split so that one group enters the top of the distribution frame and the other enters the bottom. The cabling options and glanding diagrams are described and illustrated in Chapter 4 "Installation Planning" *(see paragraph 4.3.2 on page 45)*.

The busbar connections are identified on a label attached to the inside of the distribute frame door, as shown in Figure 5.18.

Key Point: All the busbar terminations should be made using M12 bolts and tightened to a torque of 50-75 Nm.

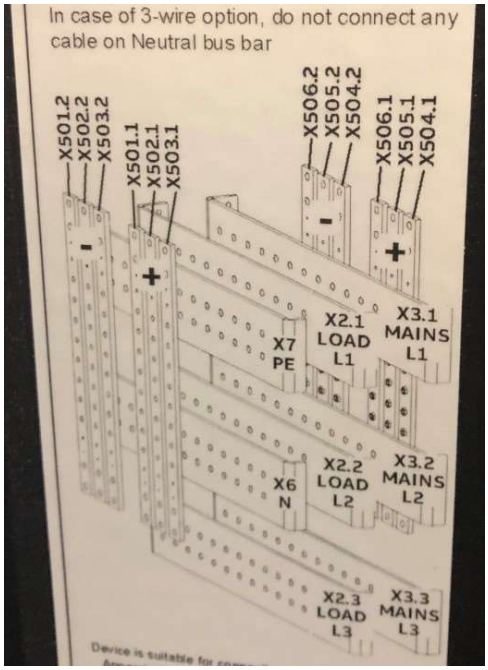

Figure 5.18 Power connections

Power cabling procedure

WARNING: The design of the external switchgear panel(s) is bespoke to the installation – see paragraph 4.3.1. Ascertain the local switchgear arrangement before commencing this procedure.

1. Ensure that the UPS mechanical installation has been completed and the UPS input and output feeds are isolated.
2. Gain internal access to the UPS cabinet's distribution frame.
3. Connect the input supply protective earth cable from the mains switchboard (and/or external maintenance bypass panel) to terminal X7:PE.
4. Connect the UPS input mains supply (3ph + N) from the mains switchboard (and/or external maintenance bypass panel) to the input mains terminals X3.1:L1, X3.2:L2, X3.3:L3, X6:N as shown below in Table 5.1.
5. Connect a protective earth cable from X7:PE to the earth connection of the UPS output distribution panel (and/or external maintenance bypass panel).
6. Connect the output supply (3ph + N) from the output (load) distribution panel to the external output switch (and/or external maintenance bypass panel) to the UPS output terminals X2.1:L1, X2.2:L2, X2.3:L3, X6:N as shown in the table below.

Table 5.1 Distribution frame power connections

INPUT MAINS		UPS OUTPUT		BATTERY
Cable	Busbar	Cable	Busbar	
1L1	X3.1	3L1	X2.1	To be connected by the commissioning engineer
1L2	X3.2	3L2	X2.2	
1L3	X3.3	3L3	X2.3	
1N	X6.N	3N	X6.N	
PE	X7.PE	PE	X7.PE	

IMPORTANT NOTE

The batteries must be installed and connected to the UPS by the Rehlko commissioning engineer. High voltage battery strings can be extremely dangerous and **should not** be installed by the customer's installation team.

It is the customer's responsibility to install appropriate cable containment facilities between the UPS cabinet and battery cabinet where necessary – e.g. cable trays or trunking. Contact Rehlko for further installation advice if required.

Remote monitoring and control facilities

Various optional remote monitoring and control facilities can be connected to the communications interface board located near the top of the distribution frame. The external cables enter the cabinet through pre-fitted cable glands in the cabinet roof adjacent to the power cables. The remote monitoring cables can also enter from below the cabinet through a hole adjacent to the front right foot in the distribution frame.

Although the commissioning engineer will check the correct operation of all the optional communications features as part of the system commissioning procedure, the cables can be connected by the customer installation team at this point provided no external power is applied to the interfacing circuits.

Alternatively, the cables can be laid but left for the commissioning engineer to connect. Details of the interface facilities and other options are provided in Chapter 9.

© Rehlko 2026

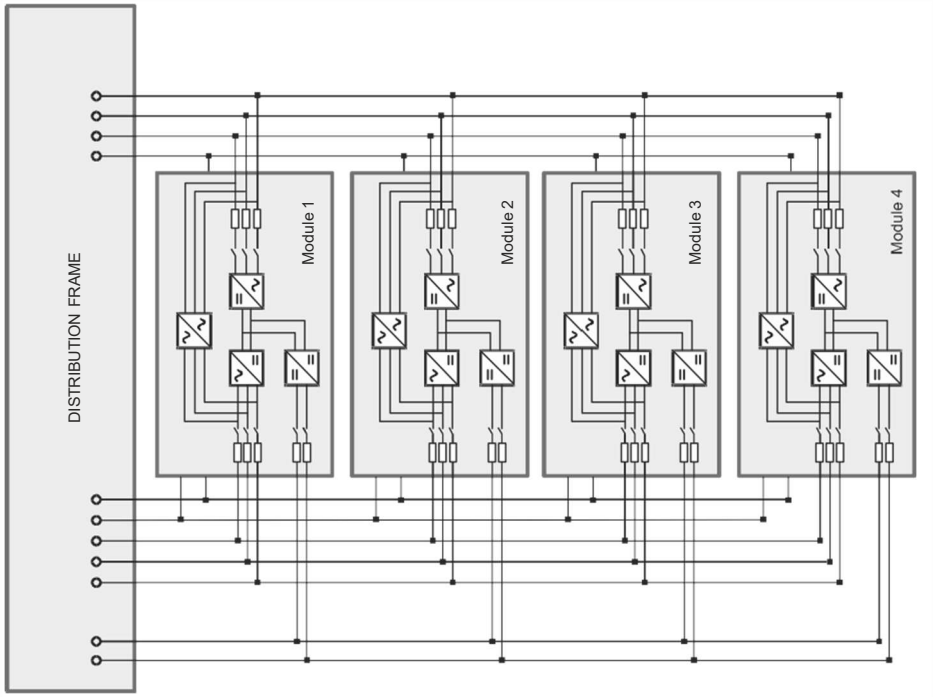

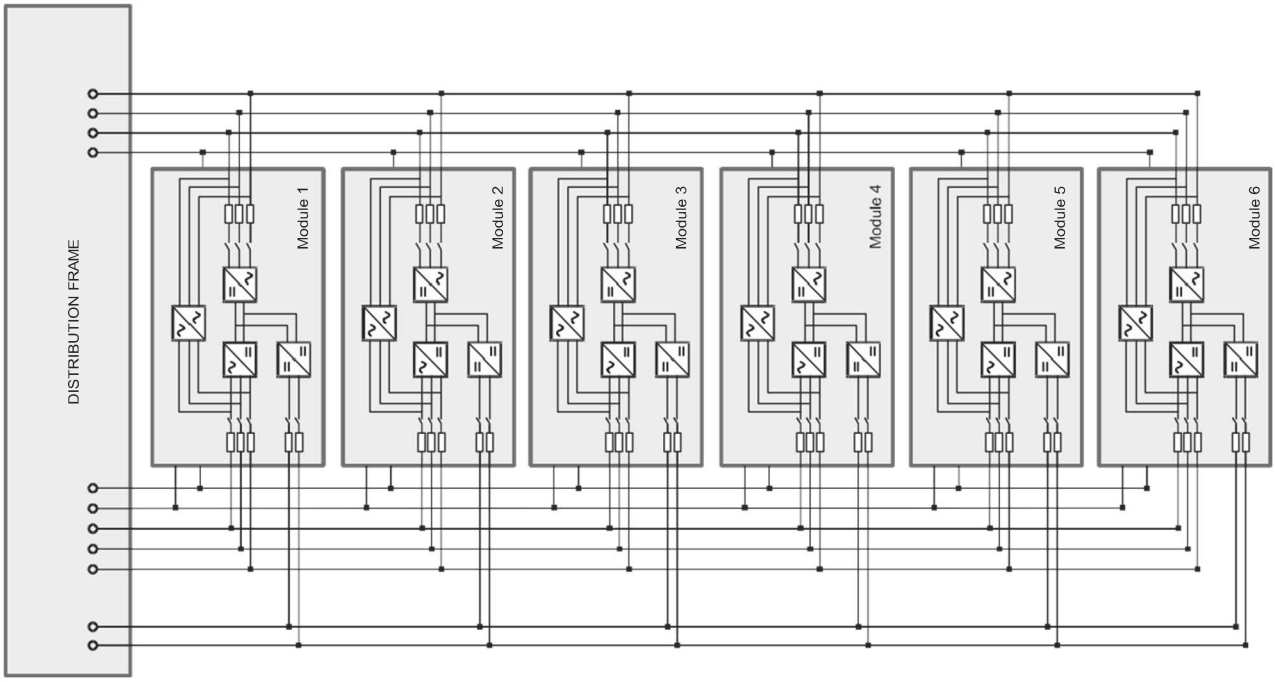

Figure 5.19 Wiring diagrams for 1000 kW and 1500 kW cabinets (common battery)

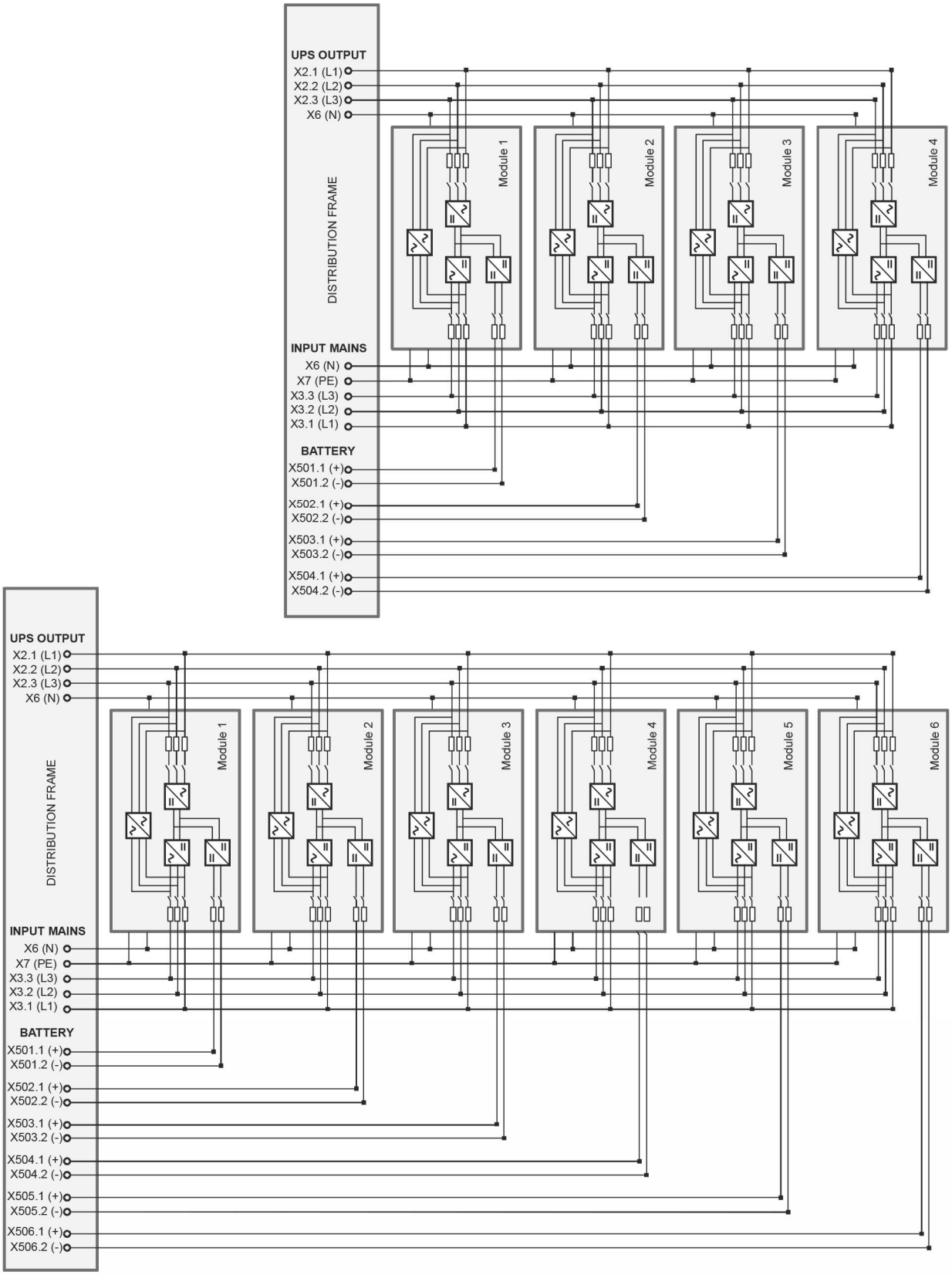

Figure 5.20 Wiring diagrams for 1000 kW and 1500 kW cabinets (individual battery)

6. Operating Instructions

6.1 Introduction

The PW MF1500 DPA UPS system must be commissioned by a fully trained engineer authorised by Rehlko before it is put into use.

The commissioning engineer will:

- check the UPS electrical and mechanical installation, and operating environment
- install and connect the UPS batteries
- check and complete the UPS configuration settings
- check the installation and operation of any optional equipment
- perform a controlled UPS start-up andfully test the system for correct operation
- provide operator training and hand over the system to the customer in a fully working condition – usually with all the UPS modules turned on and operating in the inverter mode (or bypass mode, if appropriate)

WARNING: Rehlko will not accept responsibility for the equipment or the safety of any personnel if the UPS system is operated before it has been fully commissioned.

The manufacturer's warranty will be invalidated if power is applied to any part of the UPS system before it has been fully commissioned and handed over to the customer.

6.1.1 General warnings

WARNING: These operating procedures should be performed by a trained operator.

WARNING: When the UPS system is operating on `BYPASS` or via the `MAINTENANCE BYPASS SWITCH`, the load supply is unprotected if the bypass mains supply fails. It is essential that the load user is informed of this possibility before you intentionally select either of these operating modes.

WARNING: When the UPS is turned OFF, power is still applied to the UPS input terminals unless the mains supplies are isolated at the incoming switchboard.

6.2 Useful operating notes

6.2.1 Module control panel leds

The module control panel leds mentioned in the operating procedure are identified in Figure 6.1. These interpretation of the led colours is explained on Page 18.

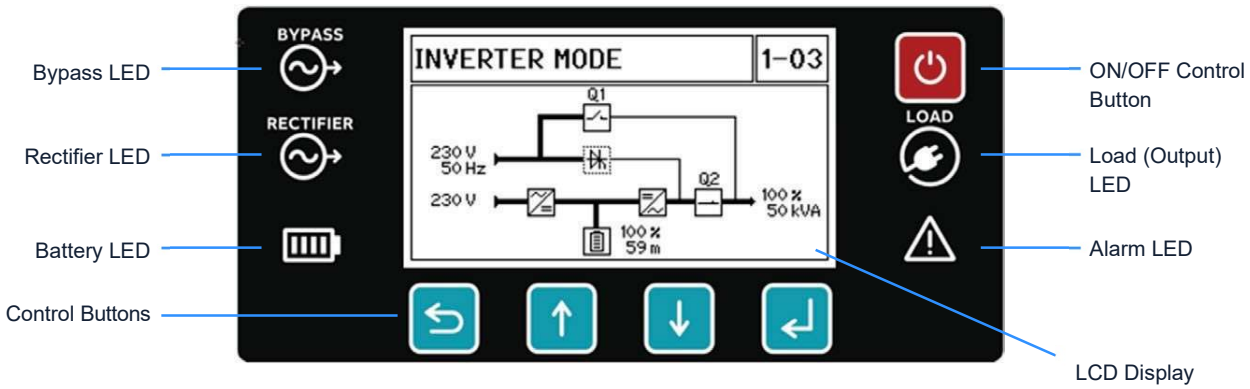

Figure 6.1 Module control panel leds

6.2.2 External maintenance bypass switch

The UPS cabinet does not contain any input or output power switches or circuit breakers: these are usually incorporated in a bespoke external maintenance bypass facility such as the example shown for a single cabinet installation in Figure 6.2.

The maintenance bypass facility may be contained in a dedicated switchgear cabinet or fitted to a pre-existing switch panel. See paragraph 4.3.1 for more information concerning the UPS system input/output power switching.

Note: The maintenance bypass switch is annotated 'Ex.Q1' on the module control panel mimic, and the cabinet's external output switch is shown as 'Ex.Q2'.

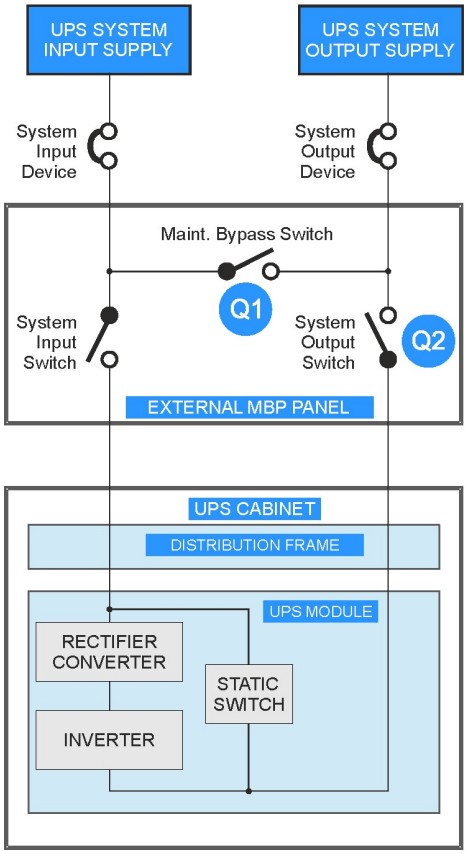

IMPORTANT NOTE

The switches in the external maintenance bypass cabinet can be fitted with some form of electro/mechanical interlock (e.g. Castell Key interlock system) to prevent the maintenance bypass switch from being closed while the UPS is operating on inverter. It is therefore important that you should familiarise yourself with the operation of the external maintenance bypass circuit and external power switches before using these operating procedures.

6.2.3 Operating procedure summary

The UPS system has four stable operating states, as shown in Figure 6.3. Under normal circumstances (Xtra VFI disabled) all the UPS modules in the PW MF1500 DPA system are turned on and operating in the 'on inverter' mode.

If one module fails in a redundant module system the faulty module will shut down but it will not affect the remaining module(s), which will continue to operate normally. If necessary, the failed module can then be removed or tested off-line.

If a UPS module fails in a non-redundant system, the load will immediately transfer to the static bypass and it will be powered from the unprotected mains supply.

Key Point: When starting the UPS system from a fully powered down condition we recommend that you connect the load while the system is operating on the maintenance bypass in order to reduce the possible effects of high inrush currents that might occur when turning on large loads.

6.2.4 Start/stop operating sequence

The operating instructions explain how to transit through the four stages shown in Figure 6.3 when starting or shutting down the system as follows:

- How to start the UPS system from a fully powered down condition - see paragraph 6.3
- How to start the UPS system from the maintenance bypass - see paragraph 6.4
- How to transfer the load from inverter to the maintenance bypass - see paragraph 6.5
- How to completely shut down the UPS system - see paragraph 6.6
- Operating in ECO mode - see paragraph 6.7
- Individual module stop/start procedure (redundant system only) - see paragraph 6.8
- Cold start - see paragraph 6.9

© Rehlko 2026

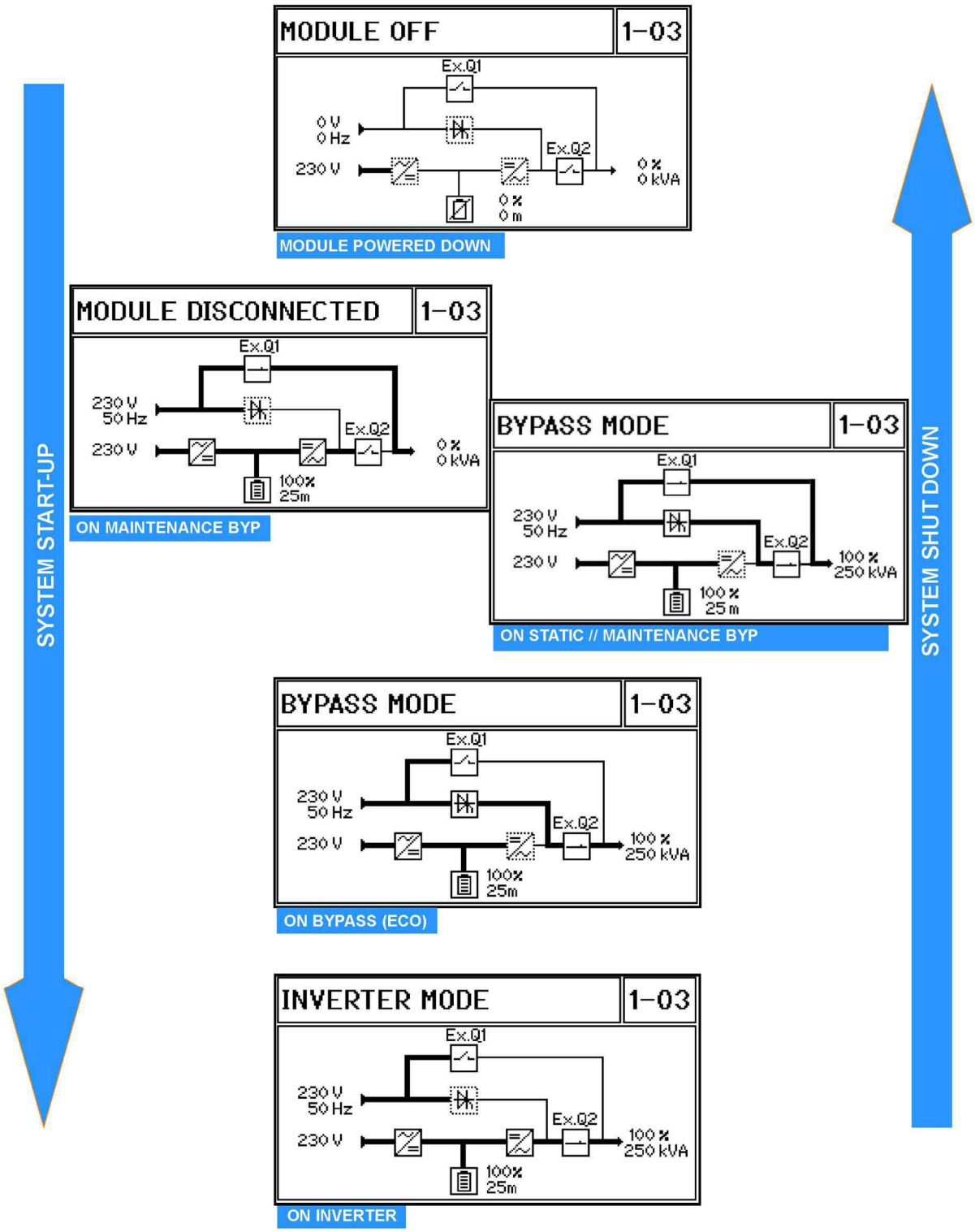

Figure 6.3 Operating procedure transitions

6.3 How to start the UPS system from a fully powered down condition

Initial conditions:

This procedure assumes the following initial conditions:

- The load is fully powered down.
- The external maintenance bypass switch (Q1) is open.
- The external UPS output switch (Q2) is open.
- The UPS input mains supply fuses (or breakers) are open (OFF) at the incoming mains switchboard(s).
- The external battery fuses (or breakers) are open (OFF).

6.3.1 Power-up the load (Maintenance Bypass)

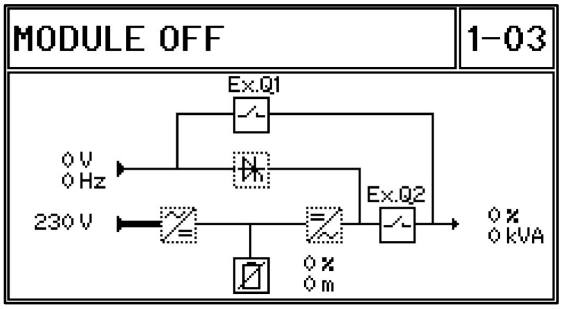

1. Turn ON the UPS system input mains supply at the incoming mains switchboard(s).
   a. Power is now applied to the UPS modules, but the modules are turned OFF.
2. On the module control panel (of ALL modules) verify that:
   a. The operating status shows MODULE OFF.
   b. The RECTIFIER and BYPASS leds are green.
   c. The LOAD led is OFF.
   d. The BATTERY led is flashing red.
   e. Q1 and Q2 both indicate OPEN.
   f. The Event Log displays LOAD OFF, SUPPLY FAILURE. If necessary press the RESET (Back) button to obtain this display.
3. Close the external maintenance bypass switch (Q1).

6.3.2 Turn on the UPS modules

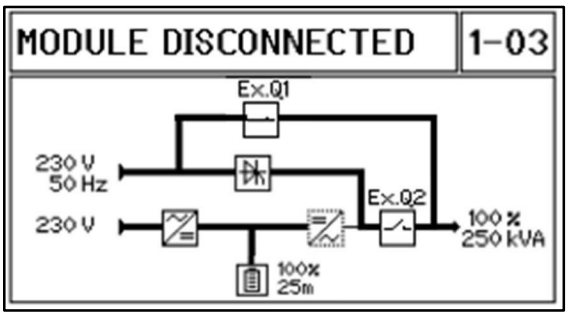

4. Carry out steps 5 to 7 below **on each UPS module in turn**.
5. On the module control panel, press the ON/OFF button and CONFIRM the Turn On request.
   a) The UPS module will power up over approximately 60 seconds and operate in the bypass mode, as shown.

   Note: Although the static switch is shown to be closed, the static bypass line is not connected to the UPS output at this time because Q2 is open.
6. Close the external battery fuses (or breakers).
   a. The BATTERY LED should flash green.
   b. Wait (up to 2 minutes) for the module to recognise the battery, whereupon the BATTERY LED will change to solid green.
7. On the module control panel verify that:
   a. The operating status shows MODULE DISCONNECTED.
   b. The external maintenance bypass switch Q1 indicates closed.
   c. The RECTIFIER and BYPASS leds are green.
   d. The LOAD LED is yellow.
   e. The BATTERY LED is green and the battery icon on the LCD panel indicates that the battery is charging.
   f. The Event Log displays MANUAL BYP IS CLOSED.
8. Before you continue, ensure that the indications on the module control panels of **ALL** modules are as shown and described above.
9. Turn on the load equipment. Where possible, we recommend turning on the largest loads first.
10. Check the output metering to ascertain that the load demand is within the UPS system rating.

© Rehlko 2026

11. Close the external UPS output switch Q2.
    a. Verify that Q1 and Q2 both indicate CLOSED.

    Note: The connected load is now being powered via the static bypass in parallel with the maintenance bypass.

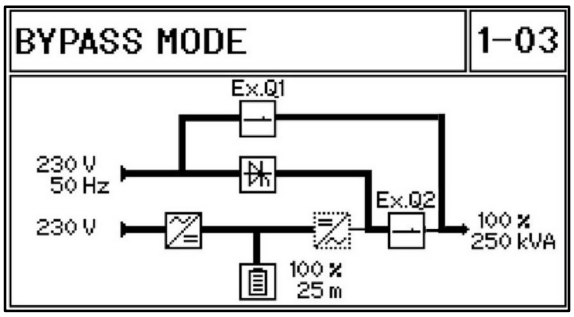

6.3.3 Transfer the load to static bypass

12. Only proceed if the module control panel BYPASS LED is green (on ALL modules).

    Note: If the BYPASS LED is not green seek trained advice.

13. Open the maintenance bypass switch Q1.
14. The load is now being powered through the UPS static bypass alone, and the module control panel mimic should appear as shown here. Verify that:
    a. The operating status shows BYPASS MODE.
    b. The RECTIFIER and BYPASS leds are green.
    c. The OUTPUT led is yellow.
    d. The BATTERY LED is green and the battery is charging.
    e. Q1 indicates OPEN and Q2 CLOSED.
    f. The Event Log displays MANUAL BYPASS OPEN followed by LOAD NOT PROTECTED.
15. Check the UPS input and output metered parameters to ensure that they are correct.
16. Make a note of any active alarm(s) and take appropriate actions if an alarm cannot be reset.

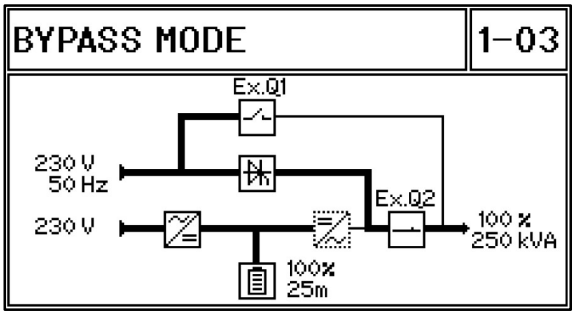

6.3.4 Transfer the load to inverter

17. On the module control panel of any UPS module *(see also paragraph 6.7.4)*:
    a. Press the UP key once to access the menu system.
    b. Use the UP/DOWN keys to move the cursor so that it is adjacent to COMMANDS then press the ENTER key.
    c. Use the UP/DOWN keys to move the cursor so that it is adjacent to LOAD TO INVERTER then press the ENTER key.
18. The UPS will transfer the load to the inverter in ALL modules, and the module control panels should appear as shown.
19. On the module control panel verify that:
    a. The operating status shows INVERTER MODE.
    b. The RECTIFIER and BYPASS leds are green.
    c. The OUTPUT led is green.
    d. The BATTERY LED is green and the battery is charging.
    e. Q1 indicates OPEN and Q2 CLOSED.
    f. Verify that the system control panel shows that the load is on inverter.

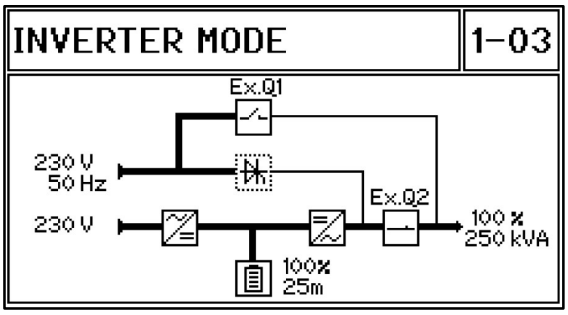

Key Point: The UPS System is now in inverter mode and providing the load with processed, protected power.

6.4 How to start the UPS system from the maintenance bypass

Summary

This procedure describes the sequence of actions required to re-start the UPS system if it had been shut down for operational reasons whilst supporting the load via the unprotected maintenance bypass supply.

This is very similar to the previous procedure, *"How to start the UPS system from a fully powered down condition"*, except that in this case the maintenance bypass switch is already closed, making load power is already available.

Initial conditions:

This procedure assumes the following initial conditions.

- the external maintenance bypass (`Q1`) switch is closed
- the external UPS output switch (`Q2`) is open
- the UPS input mains supply fuses (or breakers) are open (`OFF`) at the incoming mains switchboard(s)
- the external battery fuses (or breakers) are open (`OFF`).

6.4.1 Power up procedure

1. Follow the instructions in paragraph 6.3 (with the following exceptions:
   a. Ignore paragraph 6.3 step 3 as the external maintenance bypass switch `Q1` is already closed.
   b. In paragraph 6.3 step 9 the load will already be connected if it was previously being supplied through the maintenance bypass supply.

© Rehlko 2026

6.5 How to transfer the load from inverter to the maintenance bypass

Summary

It may be necessary to transfer the load to the maintenance bypass supply to perform certain service or maintenance operations – for example, when replacing a UPS module in a capacity (non- redundant) rated system. This procedure is normally carried out by a trained service engineer and is not usually part of the day-to-day management of the UPS system.

CAUTION: *Before you carry out this procedure, warn the critical load user that the load will not be supplied with processed, backed-up power once the transfer to maintenance bypass has been performed.*

Initial conditions:

This procedure assumes **one** of the following initial conditions.

1. The UPS system is operating in inverter mode, with the load powered by the UPS inverters (shown here).

   In which case continue at paragraph 6.5.1, step 3 below:

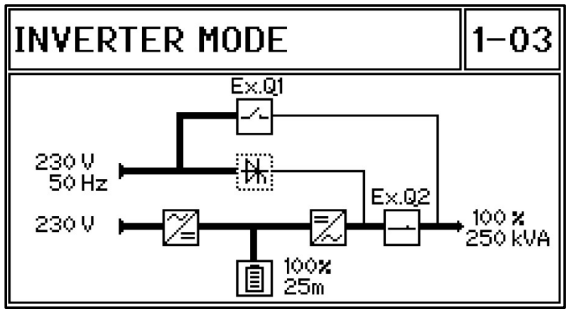

2. The UPS system is operating in bypass mode, with the load powered through the static bypass due to either:
   - a system fault
   - severe overload
   - loss of redundancy
   - 'ECO' operating mode selected

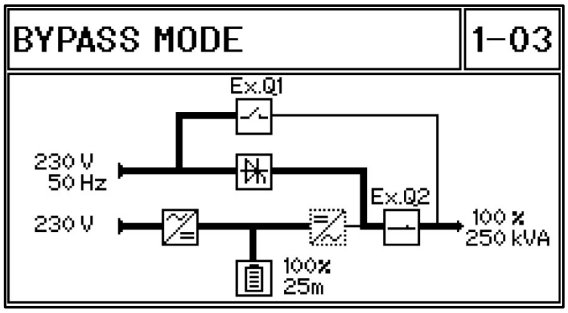

In which case continue at paragraph 6.5.1, step 5 below:

6.5.1 Transfer the load to the UPS static bypass

3. On the module control panel of any UPS module *(see also paragraph 6.7.4)*:
   a) Press the `UP` key once to access the menu system.
   b) Use the `UP/DOWN` keys to move the cursor so that it is adjacent to `COMMANDS` then press the `ENTER` key.
   c) Use the `UP/DOWN` keys to move the cursor so that it is adjacent to `LOAD TO BYPASS` then press the `ENTER` key
4. The UPS will transfer the load to the static bypass, and the module control panel mimic should appear as shown here.
5. On the module control panel verify that:
   a) The operating status shows `BYPASS MODE`.
   b) The `RECTIFIER` and `BYPASS` leds are green.
   c) The `OUTPUT` led is yellow.
   d) The `BATTERY` LED is green.
   e) `Q1` indicates OPEN and `Q2` indicates CLOSED.
   f) The Event log should display `MANUAL BYPASS OPEN` followed by `LOAD NOT PROTECTED`.

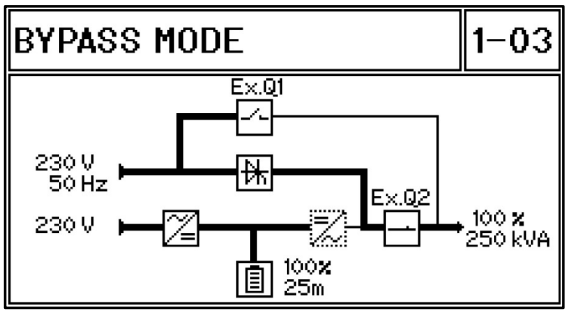

© Rehlko 2026

6.5.2 Transfer the load to maintenance bypass

6. Close the maintenance bypass switch (Q1).

7. The load is now being powered through the maintenance bypass switch in parallel with the UPS static bypass, and the module control panel mimic should appear as shown here.

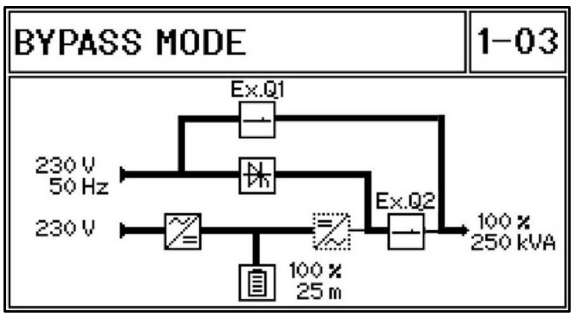

8. On the module control panel verify that:

   a. The operating status shows BYPASS MODE.
   b. The RECTIFIER and BYPASS leds are green.
   c. The LOAD LED is yellow.
   d. The BATTERY LED is green and charging.
   e. Q1 and Q2 both indicate CLOSED.
   f. The Event Log displays MANUAL BYP IS CLOSED.

9. Before you continue, ensure that the indications on the module control panels of **ALL** modules are as shown above.

6.5.3 Turn off the UPS modules

10. Open the external UPS output switch (Q2) (for every cabinet in a parallel-cabinet system where individual UPS output switches are provided for each cabinet).

11. On the module control panel verify that:

   a) Q2 indicates OPEN.
   b) The Event Log should display MODULE DISCONNECTED.

12. Turn OFF each UPS module in turn by pressing the module control panel ON/OFF button for 3 seconds and CONFIRM the Turn Off action.

13. Once all modules are turned OFF open the external battery fuses (or breakers).

14. The UPS system is now operating on maintenance bypass with the modules turned OFF. The module control panel mimic of all modules should appear as shown here.

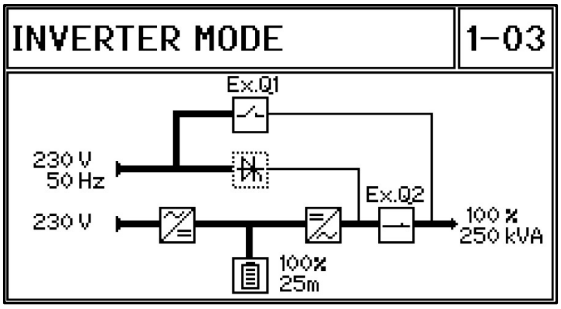

15. On the module control panel verify that:

   a) The operating status shows MODULE OFF.
   b) The RECTIFIER and BYPASS leds are green.
   c) The LOAD LED is OFF.
   d) The BATTERY LED is red.

Key Point: The load is now connected to the external maintenance bypass supply and is unprotected against mains supply aberrations or outage.

6.6 How to completely shut down the UPS system

Summary

The UPS system can be completely shut down if the load does not require power for an extended period of time.

CAUTION: *Before you carry out this procedure, warn the critical load user that power is about to be disconnected.*

Initial conditions

- The UPS system is operating on inverter or maintenance bypass.

6.6.1 System shutdown

1. If the system is operating with load on inverter, transfer the load to the maintenance bypass supply following the procedure provided in paragraph 6.5.
2. Turn off the load equipment at the load distribution panel.
3. Open the external maintenance bypass switch (`Q1`).
4. On the module control panel (of ALL modules) verify that:
   a) The operating status shows `MODULE OFF`.
   b) The `RECTIFIER` and `BYPASS` leds are green.
   c) The `LOAD` led is OFF.
   d) The `BATTERY` led is flashing red.
   e) `Q1` and `Q2` both indicate OPEN.
   f) The Event Log `LOAD OFF`, `SUPPLY FAILURE`. If necessary press the `RESET` (Back) button to obtain this display.

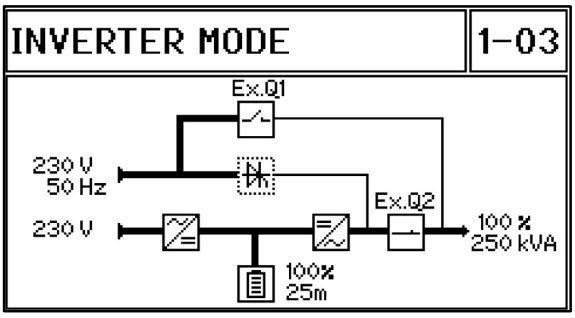

5. Turn OFF the UPS system input mains supply at the incoming mains switchboard(s).

WARNING: The UPS system is now completely turned OFF and the module control panels will power down. Wait at least 5 minutes to allow the UPS AC and DC capacitors to completely discharge before gaining internal access to the UPS cabinet power sections.

6.7 Operating in ECO mode

Summary

When operating the UPS system in ECO mode, the load is normally powered through the UPS bypass supply and automatically switches over to inverter mode if the bypass supply fails. If the bypass supply then returns to normal while the UPS is operating in inverter mode it will automatically transfer back to bypass mode.

Key Point: As the UPS input mains and bypass mains supplies are obtained from the same source it is likely that the UPS will switch to 'battery' mode if the load is transferred to inverter due to a bypass mains failure.

When operating the UPS system in ECO mode you can manually transfer the system between bypass mode and inverter mode at any time – for example, if the load requires additional power security.

CAUTION: *When operating the UPS in ECO mode there will be a very short supply break when the UPS automatically switches from bypass mode to the inverter mode due to a bypass mains failure, so you should only choose to operate the system in the ECO mode if the load equipment can withstand a brief supply break.*

6.7.1 How to turn on the UPS system and operate in ECO mode

Starting from a fully powered down state:

1. If you are starting from a fully powered down state, follow the standard UPS system start-up operating instructions in paragraph 6.3 but do not perform the "Transfer the load to inverter"' stage (paragraph 6.3.4).

Starting from load on maintenance bypass:

2. If you are starting from the load being initially powered through the maintenance bypass, follow the standard UPS system start-up operating instructions in paragraph 6.3 but do not perform the *"Transfer the load to inverter"* stage (paragraph 6.3.4).

6.7.2 How to shut down the UPS system when operating in bypass mode

1. Follow the standard UPS system shut down operating instructions in paragraph 6.6.

6.7.3 How to manually transfer between bypass mode and inverter mode

The UPS can be manually switched between the 'bypass mode' and 'inverter mode' mode through the module control panel load transfer menu.

To transfer the UPS system from bypass mode to inverter mode'

2. On the module control panel of any UPS module:
   a) Press the `UP` key once to access the menu system.
   b) Use the `UP/DOWN` keys to move the cursor so that it is adjacent to `COMMANDS` then press the `ENTER` key.
   c) Use the `UP/DOWN` keys to move the cursor so that it is adjacent to `LOAD TO INVERTER` then press the `ENTER` key
3. The UPS will transfer the load to the static bypass, and the module control panel mimic should appear as shown here.
4. On the module control panel verify that:
   a) The operating status shows `INVERTER MODE`.
   b) The `RECTIFIER` and `BYPASS` leds are green.
   c) The `OUTPUT` led is green.
   d) The `BATTERY` LED is green and charging.
   e) `Q1` indicates OPEN and `Q2` CLOSED.

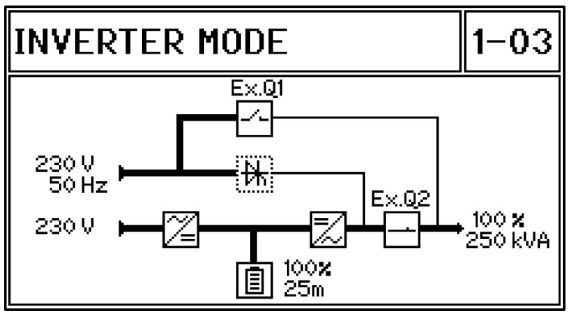

The Event Log displays `MANUAL BYPASS OPEN` followed by `LOAD NOT PROTECTED`.

To transfer the UPS system from inverter mode to bypass mode

5. On the module control panel of any UPS module:
   a) Press the UP key once to access the menu system.
   b) Use the UP/DOWN keys to move the cursor so that it is adjacent to COMMANDS then press the ENTER key.
   c) Use the UP/DOWN keys to move the cursor so that it is adjacent to LOAD TO BYPASS then press the ENTER key
6. The UPS will transfer the load to the static bypass, and the module control panel mimic should appear as shown here.
7. On the module control panel verify that:
   a) The operating status shows BYPASS MODE.
   b) The RECTIFIER and BYPASS leds are green.
   c) The OUTPUT led is yellow.
   d) The BATTERY LED is green and charging.
   e) Q1 indicates OPEN and Q2 CLOSED.
   f) The Event Log display MANUAL BYPASS OPEN followed by LOAD NOT PROTECTED.

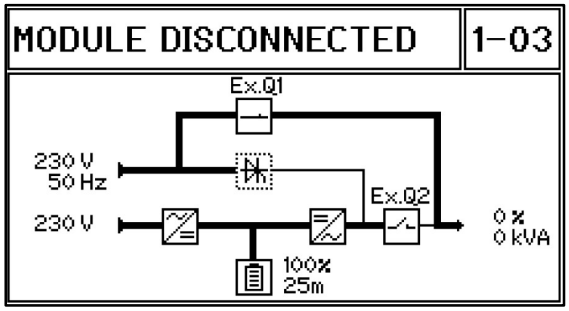

6.7.4 Load transfer using the system control panel

The load can also be transferred between the inverter and static bypass using the system control panel on the front of the distribution frame. Pressing the HOME screen Commands button will open the COMMAND screen shown here.

This password-protected screen allows you to manually transfer the load between inverter and bypass by pressing the appropriate button on the right side of the screen.

When the selected transfer has taken place, the screen will change to show the default MIMIC screen.

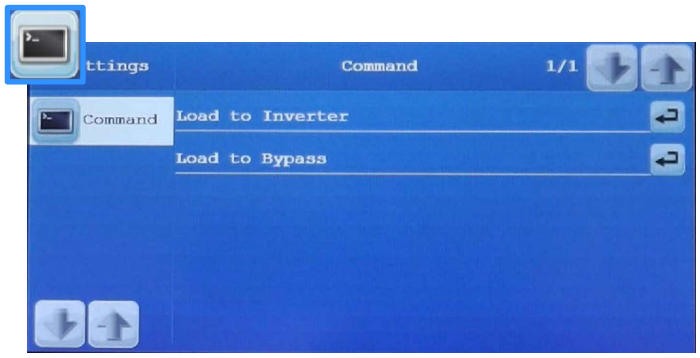

Figure 6.4 COMMANDS screen

6.8 Individual module stop/start procedure (redundant system only)

Summary

If the UPS system is operating with module redundancy one module can be turned OFF without affecting the overall system operation.

Situations where this might be put into effect are usually managed by a qualified service engineer when undertaking service checks or module replacement. However, under certain circumstances there may be a case for an individual module to be turned off by the user. For example, if a large proportion of the load is to be shut down for a significant period the number of on-line modules in the UPS system might be reduced to save on the utility power demands – although this particular scenario is better covered using the inbuilt Xtra VFI feature.

WARNING: Before you turn OFF a module check that there will be a sufficient number of modules remaining on-line to support the existing load, otherwise you will have to transfer the load to the maintenance bypass.

To turn off a UPS module:

1. Turn OFF the UPS module by pressing the ON/OFF button for 3 seconds and `CONFIRM` the Turn Off action.
2. Open the module's external battery breaker if it connected to an independent (not shared) battery.
3. The UPS module is now turned OFF and its module control panel mimic should appear as shown here.
4. On the module control panel verify that:
   a) The operating status shows `MODULE OFF`.
   b) The `RECTIFIER` and `BYPASS` leds are green.
   c) The `OUTPUT` led is OFF.
   d) The `BATTERY` LED is flashing red.
   e) `Q1` indicates OPEN and `Q2` indicates CLOSED

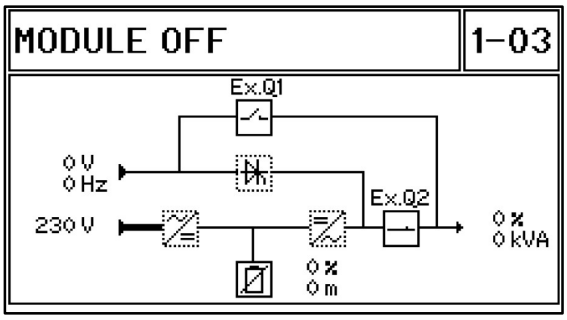

To turn on a UPS module:

1. On the module control panel, press the `ON/OFF` button to start the module and `CONFIRM` the action.
   a) The UPS module will run through it's start-up sequence over approximately 60 seconds and once it has passed all of its self-checks and synchronised to the on-line system it will turn on its inverter (unless the system is operating on bypass mode).
2. Close the module's external battery breaker if it is open.
   a) The `BATTERY` LED should flash green.
   b) Wait (up to 2 minutes) for the module to recognise the battery, whereupon the `BATTERY` LED will change to solid green and begin charging.
   c) Once the battery is recognised, the module control panel mimic should appear as shown here.
3. On the module control panel verify that:
   a) The `RECTIFIER` and `BYPASS` leds are green.
   b) The `LOAD` LED is green.
   c) The `BATTERY` is green and charging.
   d) `Q1` indicates OPEN and `Q2` CLOSED

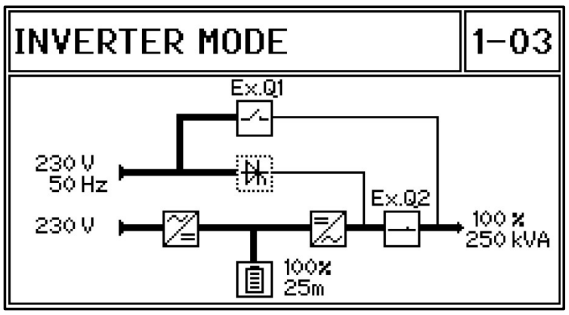

6.9 Cold start

Summary

The ‘cold start’ feature allows a UPS module to be started using battery power without the presences of the UPS input mains supply – i.e. when the UPS is turned OFF. As the battery is immediately placed on load when starting in this manner the UPS run time is limited unless the input mains supply is restored.

This option is typically used in applications where the UPS output voltage is feeding the control switching of the input mains supply, for example a motorised contactor, in which case in a total blackout situation or during the first start-up application the battery is used to feed the inverter in order to supply the output voltage that is necessary to operate the application of the input mains supply.

To ‘cold-start ‘a module (battery switch preparation)

1. Ensure that the UPS upstream and downstream protection devices are operating correctly for the protection of the UPS and load.
2. Open the module’s external battery breaker for at least 10 seconds then close it.
   a. This will apply power to the UPS control board.
   b. The UPS control board will remain live (from battery power) for 10 minutes.
3. Turn ON the UPS module(s) in turn by pressing the `ON/OFF` button on the module control panel(s) and `CONFIRM` the action.
   a. The message `START UP FROM BAT` is registered in the module event log.
4. Once the UPS inverters are operations, if the UPS cabinet input mains supply is not established automatically then turn ON the input mains supply from the external distribution switchboard.

© Rehlko 2026

7. Maintenance

7.1 Introduction

WARNING: The procedures described in this chapter must be performed by an authorised engineer/ Rehlko approved engineer who has received the appropriate level of training on this UPS system.

The UPS maintenance requirements of the user are minimal as there are no user-serviceable parts contained within the UPS cabinet. However, the UPS contains life limited components that require to be replaced at regular intervals, we recommend that the UPS and batteries are inspected and calibrated on a 6 monthly basis as part of a preventative maintenance schedule to maximise the system's performance, working life and reliability.

7.2 User responsibilities

The UPS equipment should be inspected daily to ensure that its operating environment is kept cool and dust free, and the operating temperature and humidity is within the equipment's specified operating range. The UPS equipment should also be maintained in accordance with the manufacturer's recommendations and any life limited components replaced at the required intervals and critical updates performed.

If an active alarm or status indication suggests that the UPS is not functioning correctly you should deal with immediately by referring to the troubleshooting chapter of this manual or contacting the manufacturer's service desk.

7.3 Routine maintenance

WARNING: When working inside the UPS cabinet there is a risk of exposure to potentially lethal AC and DC voltages. All work that requires internal cabinet access must be carried out by trained personnel only.

The commissioning engineer will leave a service record book inside the front of the UPS which will be used to log the UPS service history. To ensure optimum UPS operation we recommend that the system's operating parameters are checked and logged every six months.

Preventative maintenance inspections form an integral part of all Extended Warranty Agreements (maintenance contracts) offered by Rehlko – see the extended warranty information at the front of this manual.

A preventative maintenance inspection carried out as part of an Extended Warranty Agreement typically includes the following checklist:

• Site/environment conditions	• Integrity of electrical installation
• Cooling airflow	• Rectifier/booster operation and calibration
• Inverter operation and calibration	• Static switch operation
• Battery status and condition	• Load characteristics
• Integrity of alarm and monitoring systems	• Correct operation of all installed options
• Condition of life limited components	• Manufacturer recommended updates

7.4 Battery testing

A battery test can be initiated from the UPS control panel and takes approximately 3 minutes to complete.

The battery test procedure, which can be carried out irrespective of the UPS operating mode and whether or not the load is connected, should be performed only if there are no existing alarm conditions and the battery is initially fully charged.

© Rehlko 2026

8. Troubleshooting

8.1 Introduction

A number of internal and external UPS parameters and conditions are monitored and any changes are recorded in the UPS module's 'event log.' These include changes in the UPS operating mode (e.g. 'Manual byp is closed'), abnormal operating conditions (e.g. 'Mains bypass fault') or direct UPS faults (e.g. 'Inv. Phase fault'). Most abnormal and fault conditions are accompanied by an audible warning and an 'alarm' indication on the individual UPS module control panel(s) and the system control panel located on the distribution frame door.

8.1.1 Alarms

Figure 8.1 illustrates the alarm leds and reset buttons on the module control panel (top) and system control panel.

The alarm icon on the system control panel header bar is displayed only when an alarm is active. This icon also acts as a touch-button which, when pressed, mutes the audible warning and opens up the `Events log` which shows the alarm details.

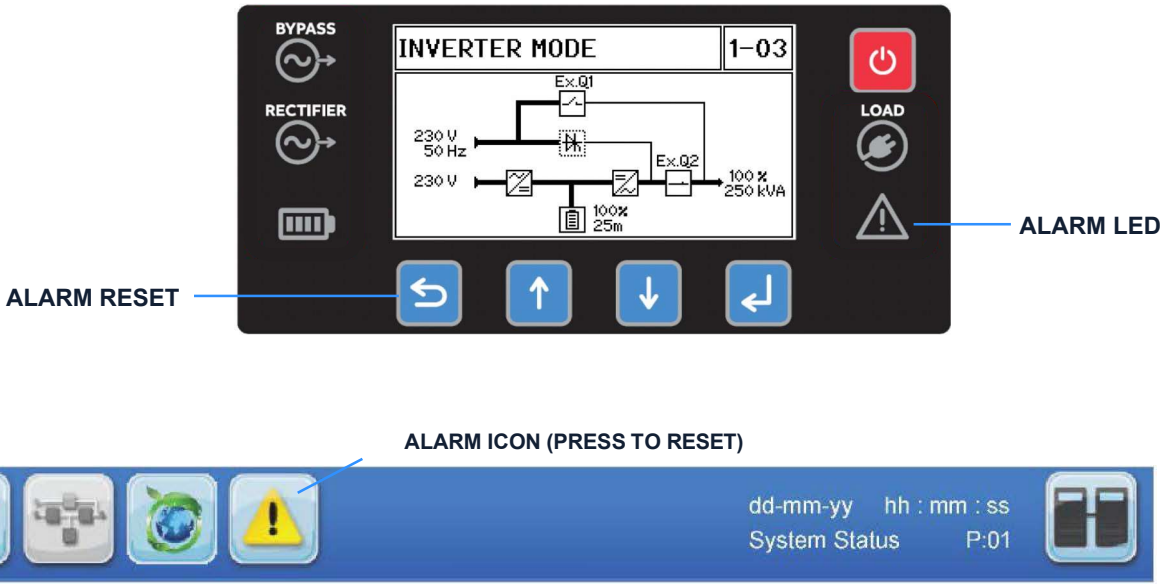

Figure 8.1 Control panel alarms

8.1.2 Events log

The event log for an individual UPS module can be viewed on the module control panel by selecting `Event log` from the main menu then scrolling through the time-stamped event history *(see page 20)*.

A system-wide events log can be viewed by pressing the `Events` button on the system control panel `HOME` screen. This will then open an events log screen which displays a chronological list of events triggered by any UPS module in the system, with the source of each event identified by module number, as described on page 19.

8.2 Troubleshooting procedure

If an alarm occurs we recommend you take the following actions:

1. Attempt to RESET the alarm.
   a. The audible warning should mute.
   b. If the alarm condition is no longer present the alarm led/icon should extinguish.
   c. If the alarm led/icon does not extinguish it indicates that the detected alarm condition is still active

> **IMPORTANT NOTE**
>
> Certain alarm conditions may 'latch-on' even after the cause of the alarm is no longer present. For example, if there is a brief mains failure during unattended operation the `MAINS RECT FAULT` alarm will activate and the alarm led/icon and audible warning may still be active even after the mains supply has returned to normal. Similarly, an `OVERLOAD` alarm might have been caused by a brief inverter overload.
>
> If any alarm appears, the first action to take is to always attempt to `RESET` it.
>
> If the alarm resets then it was probably caused by a transient condition – i.e. the UPS has responded correctly to an event and no further action is required. Investigative action is necessary only if it is not possible to reset the alarm or if the alarm occurrence is repetitive, in which case you should seek advice or assistance from the Rehlko Service Department.

2. Note and record any available information that might help diagnose the problem.
   a. Access the `Event logs` and note the latest sequence of events.
   b. Note and record the condition of the status leds on the module control panel and any other indications on the module control panel and system control panel.
   c. Note and record the indicated input, output and battery supply parameters on the control panel meters.

Seek assistance from your nearest service centre if the cause of the alarm is beyond the simple rectification measures suggested in the troubleshooting table below.

© Rehlko 2026

8.3 Troubleshooting table

ALARM CONDITION	MEANING	SUGGESTED SOLUTION
MAINSRECT.FAULT	Input mains power supply is outside prescribed tolerance.	The UPS input mains voltage to UPS is low or missing. If site power appears to be OK, check the UPS input mains supply fuses /circuit breakers etc.
MAINSBYP.FAULT	Bypass mains power supply is outside prescribed tolerance	The UPS bypass mains voltage to UPS is low or missing. If site power appears to be OK, check the UPS input mains supply fuses /circuit breakers etc
OUTPUTSHORT	There is a short circuit at the output of UPS (on the load side).	Check for a short circuit on a connected load. Check all output connections and protective devices.
OVERLOAD	Load exceeds the UPS rated power.	Identify which piece of equipment is causing the overload and disconnect it from the UPS.
TEMPERATUREHIGH	UPS temperature has exceeded the allowed value.	Check the ambient temperature of the UPS is <40°C. If the ambient temperature is normal call the authorised service centre for assistance.
INV.PHASEFAULT	Inverter is faulty.	Call the authorised service centre for assistance.
SYNCHRON.FAULT	The inverter and mains are not synchronised.	The frequency of the UPS input mains supply is outside the configured UPS operating limits and the UPS static bypass has been temporarily disabled. Call the authorised service centre for assistance if this is a repetitive problem.
BATTERYIN DISCHARGE	Battery is near end of autonomy	Shutdown the load connected to UPS before the UPS switches itself off to protect its batteries
MANUALBYPIS CLOSED	External maintenance bypass is closed. Load supplied by mains	This alarm is only displayed if the UPS is on maintenance bypass. If this is not a desired state, turn on the UPS system following the correct operating procedure

8.4 Contacting service

Rehlko has a service department dedicated to providing routine maintenance and emergency service cover for your UPS. If you have any queries regarding your UPS please contact us.

Rehlko Uninterruptible Power Ltd.

Woodgate, Bartley Wood Business Park Hook,

Hampshire, United Kingdom. RG27 9XA

Tel: +44 (0)1256 386701

0800 731 3269 (24Hr.)

Email: ukservice.ups@rehlko.com

We recommend that your UPS is protected by an extended warranty agreement. These agreements assist us in caring for your UPS, ensuring that it is well maintained and attended to promptly should any problems occur.

© Rehlko 2026

9. Options

9.1 UPS Communications panel

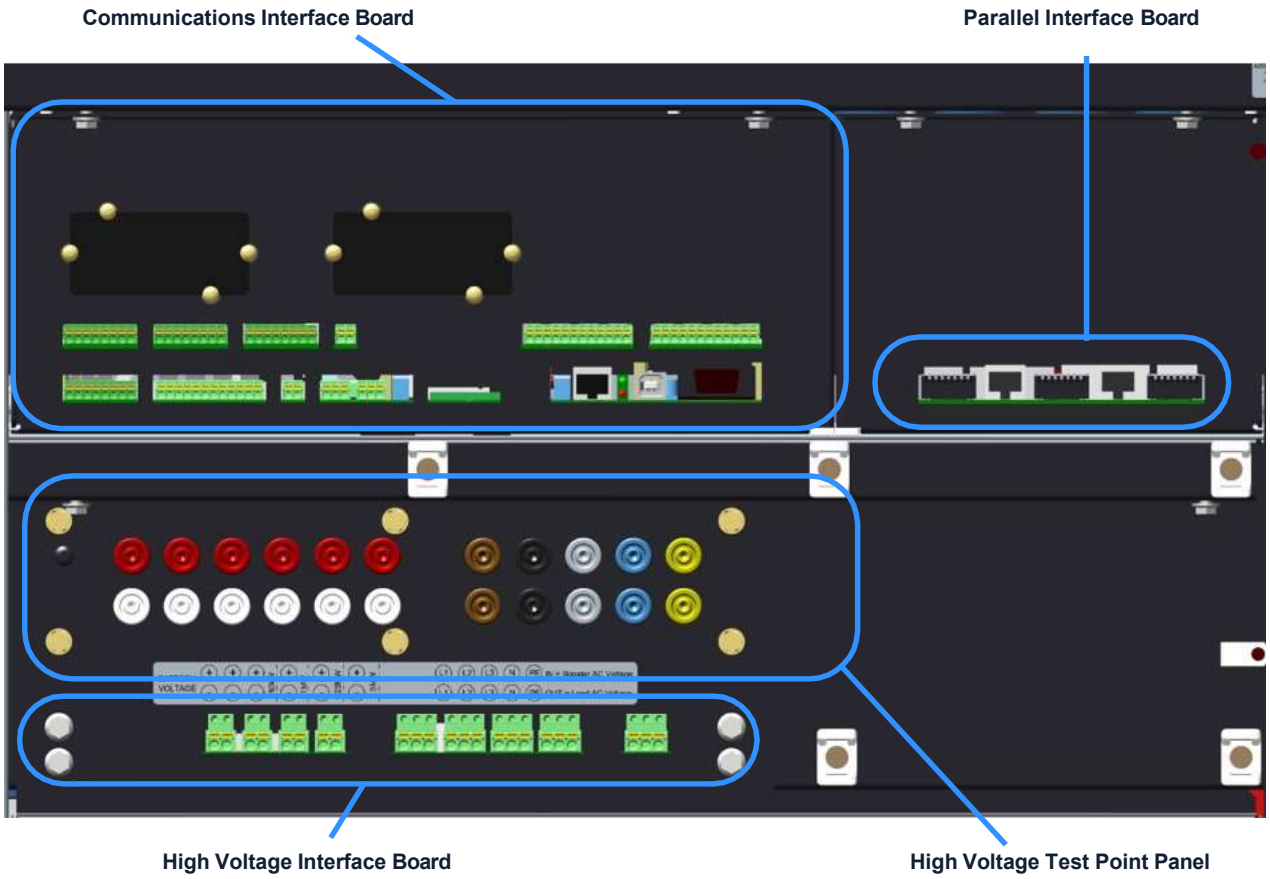

Figure 9.1 External interface facilities

A communications panel located near the top of the distribution frame contains a number of interface facilities that can be divided into three functional areas, as depicted in Figure 9.1.

- The communications interface provides various I/O control and monitoring connections that can be used to interface the UPS with a local network, building management system or a simple remote alarms/power off facility. The connectors shown in this area of Figure 9.1 are attached to two circuit boards that are fitted behind the panel; however, as the function of the two boards is similar they are jointly referred to as the communications interface board in this manual.
- The parallel interface board is used to connect the parallel communications bus between two (or more) cabinets in a multi-cabinet UPS system.

Three high voltage I/O interfaces are fitted below the high voltage test point panel, which is located immediately below the communications interface board.

9.2 Communications interface

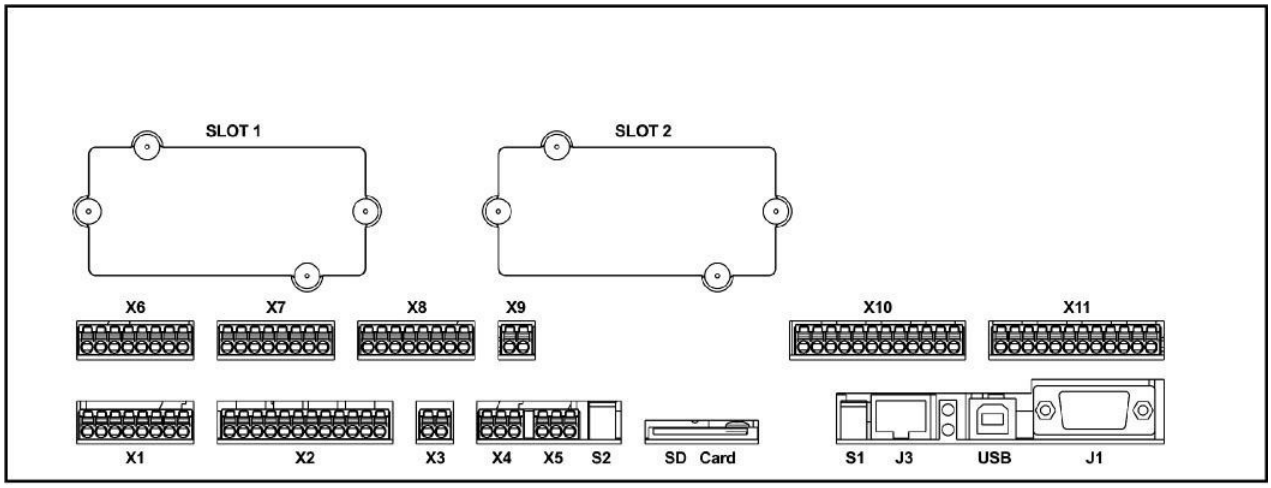

X1	Dry port inputs		X9	+24 Vdc output
X2	Dry port outputs		X10	Dry port outputs (configurable)
X3	Battery temperature sensor		X11	Dry port outputs (configurable)
X4	MODBUS communications port		J1	Serial RS-232
X5	CAN BUS communications port		J3	System control panel
X6	Analog input port		USB	Laptop USB serial interface
X7	Dry port inputs (configurable)		SD Card	Not used
X8	Dry port inputs (configurable)		Slots 1&2	Network management cards

Figure 9.2 Communications interface

Section 9.2 describes the various interface available on the communications interface board.

In a multi-cabinet UPS system a communications interface board is fitted in the distribution frame of each cabinet; however, a feature known as ‘Multidrop’ can be used to allow the communications interface board in the master cabinet to collect data/messages from the slave cabinets.The received data which is then processed at a centralised point on the ‘master’ communications interface board and the resulting ‘system-wide’ data stream is made accessible to the RS232 port (J1), USB port and an SNMP/Ethernet card inserted in card-slot 1. The advantage of using multidrop is that it enables the entire UPS system to be integrated into a LAN/WAN network management system using a single interface cable rather than requiring separate cables connected to the communications interface board in the individual UPS cabinets.

Multidrop data is transmitted between the UPS cabinets along the ‘parallel control bus,’ and once the parallel control bus cables are fitted the communications interface boards must be configured for multidrop operation, which will be carried out by the commissioning engineer. Multidrop is enabled by default.

A simplified block diagram illustrating the effects of the multidrop cable on the UPS system external communications is shown in Figure 9.3. This diagram depicts a two-cabinet parallel system with three UPS modules installed in each cabinet.

With multidrop installed, all the communication outputs on the communications interface board in UPS cabinet 2 are shown inhibited. Without the multidrop cable fitted, all the interfaces shown in both cabinets would be active with the data sourced from their respective cabinets.

© Rehlko 2026

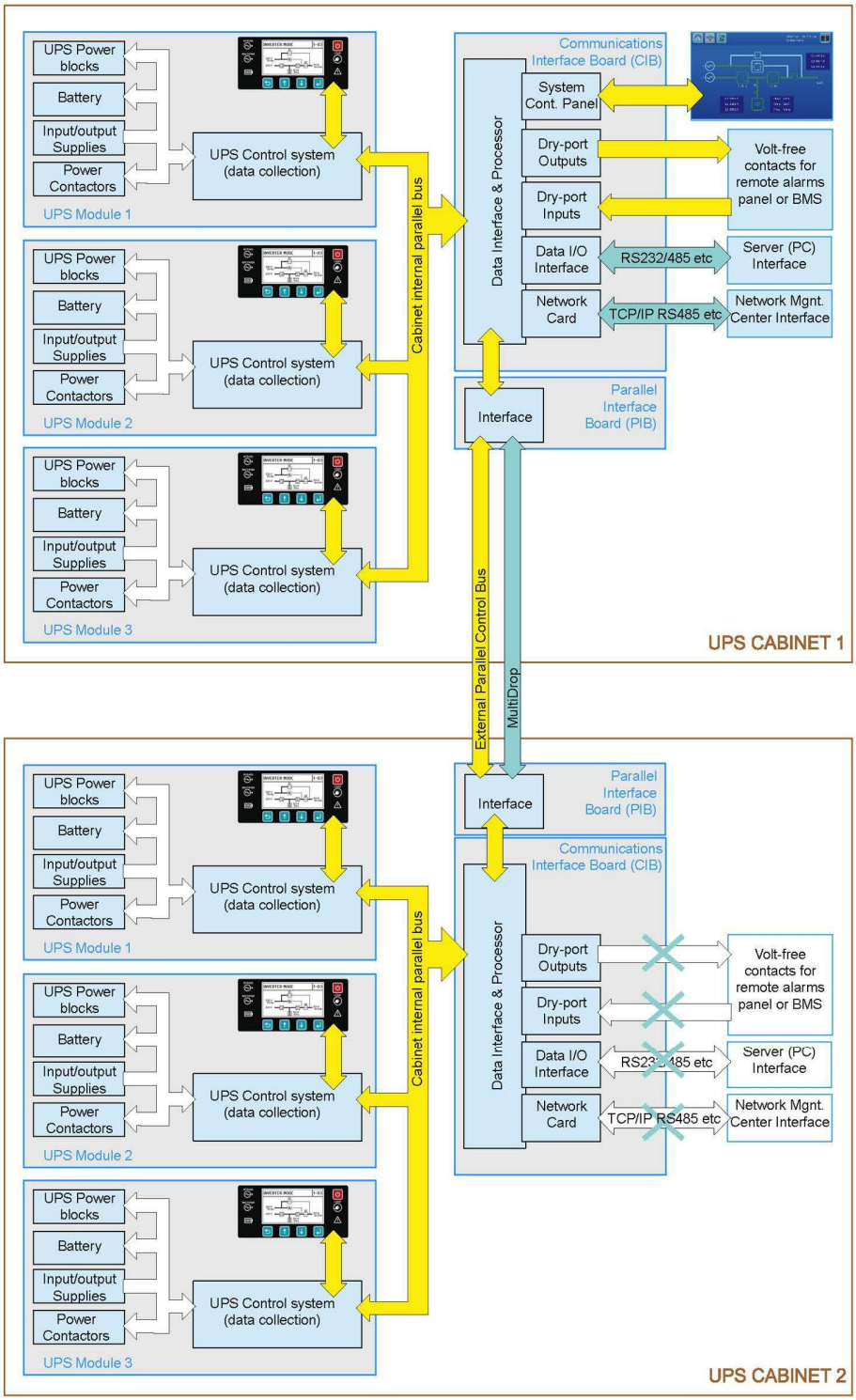

Figure 9.3 Inter-cabinet parallel connections

The effects of multidrop on the dry port interface connections

In a multi-cabinet system the functionality of the input and output dry-ports are affected by multidrop, as follows:

- In a multi-cabinet UPS system where 'multidrop' **is not** used:

  the dry-port inputs operate independently on the communications interface board fitted to each cabinet and each cabinet must be connected individually to the external BMS/Monitoring facility.

  if an optional battery temperature sensor is connected to X3 it affects the charger operation on every UPS module within the cabinet.

- In a multi-cabinet system where 'multidrop' **is** used:

  the dry-port inputs on the communications interface boards fitted in the 'slave' cabinet(s) are inhibited except for the external output breaker input (X1 5/6) and the external maintenance bypass switch inputs (X1 3/4).

  the 'generator on' input (X1 7/8) and 'remote power off' input (X1 1/2) must be connected to the communications interface board in the 'master' cabinet only. When activated, these inputs will operate on the entire system.

  the optional battery temperature sensor input is inhibited.

Key Point: If the battery temperature sensor option is used it will be effective in the master cabinet only.

The external hard-wired connections to the communications interface board are made to Phoenix spring terminals that will accept wires from 0.2 mm² to 1.5 mm², however we recommend using 0.5 mm² gauge wires for ease of connection.

9.2.1 Input dry port (X1)

Term	Contact	Signal	Function
X1 / 8		GND	**Generator ON** Generator Operation (N.O.) (Programmable +24V = Generator ON or OFF)
X1 / 7		+24 Vdc	
X1 / 6		GND	**External Output Breaker** External Output Breaker (N.O.) (Programmable +24V = Breaker CLOSED or OPEN)
X1 / 5		+24 Vdc	
X1 / 4		GND	**External maintenance bypass** External Manual Bypass (N.O.) (Programmable +24V = Bypass CLOSED or OPEN)
X1 / 3		+24 Vdc	
X1 / 2		GND	**Remote power off (+24V switched)** Default setting: disabled. Can be enabled and set to be NO or NC using the UPS service/communication tool.
X1 / 1		+24 Vdc	
Note: These inputs control 24V isolation relays on the communications interface board. The +24 Vdc voltages shown in this table are the relay coil open-circuit voltages.			

All cables connected to X1 are inputs and the connected cables should be rated at <50 Ohms impedance @10 mA.

External maintenance bypass

A volt-free auxiliary contact of the external maintenance bypass switch (or circuit breaker) should be connected between terminals X1/3 and X1/4. This input is indicated as Q1 on the module control panels and is part of an electrical interlock which prevents the UPS from operating on inverter when the maintenance bypass device is closed and it can be programmed to accept either a normally closed (N/C) or normally open (N/O) connection – N/O is the default setting but it can be modified to N/C using a software setting.

To fit an external maintenance bypass interlock facility:

1. Use a screened cable with 1 pair (section of wires 0.5 mm^2 - 1.5 mm^2) and maximum length of 100m.
2. Connect the cable to X1/3 and X1/4.

© Rehlko 2026

External output circuit breaker

A external circuit breaker can be connected to the UPS system output to provide a means of connecting/disconnecting the UPS output to the load distribution panel. A volt-free auxiliary contact of the external breaker should be connected to terminals X1/5 and X1/6 to enable the UPS to sense the circuit beaker's operational status, which is indicated as Q2 on the module control panels. This input can be programmed to accept either a normally closed (N/C) or normally open (N/O) connection when the circuit breaker is closed – N/O is the default setting but it can be modified to N/C using a software setting.

To fit an external maintenance bypass interlock facility:

1. Use a screened cable with 1 pair (section of wires 0.5 mm^2 - 1.5 mm^2) and maximum length of 100m.
2. Connect the cable to X1/5 and X1/6.

Remote power off

The remote power off (RPO) facility comprises an external switched connected between terminal X1/1 and X1/2.

This input can be programmed to accept a normally closed (N/C) or open (N/O) connection but N/C is the default setting.

When the remote switch is operated it shuts down the UPS and turns OFF the UPS output which disconnects it from the load supply.

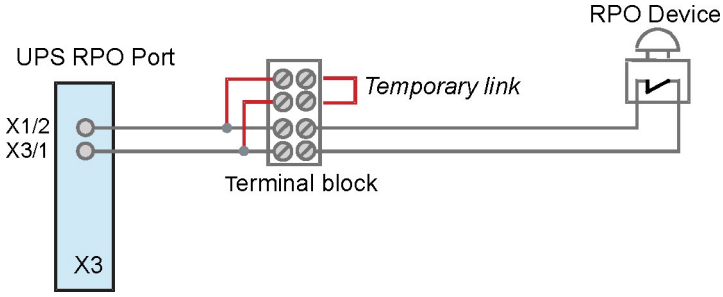

Figure 9.4 Remote power off (RPO) connection

We recommend that a terminal block with linking facilities is installed between the UPS shutdown port and the remote shutdown switch, as shown, in order to allow the removal of the remote shutdown device for maintenance or testing without affecting the UPS operation.

If the remote power off option is required, it must be activated by a hardware code on the `SETUP SERVICE` menu, which will be done as part of the UPS system commissioning process. If you wish to activate this feature after the system has been commissioned please contact Rehlko service department for advice.

To fit an external remote shutdown facility:

1. Use a screened cable with 1 pair (section of wires 0.5 mm^2 - 1.5 mm^2) and maximum length of 100m.
2. Connect the cable as shown in Figure 9.4.

WARNING: The remote power off (RPO) is designed to disconnect the UPS AC output supply but does not totally shut down the UPS system. For this reason it should not be considered as an 'Emergency Stop' mechanism.

Generator ON facilities

The generator ON facility uses a normally-open contact which closes when the standby generator is running and providing the UPS input power source.

When this option is used, it can be configured to inhibit the operation of the battery charger and/or static bypass while the generator is on-line. This will be set by the commissioning engineer.

To fit an external remote Generator ON facility:

1. Use a screened cable with 1 pair (section of wires 0.5 mm^2 - 1.5 mm^2) and maximum length of 100m.
2. Connect the cable as shown in Figure 9.5.

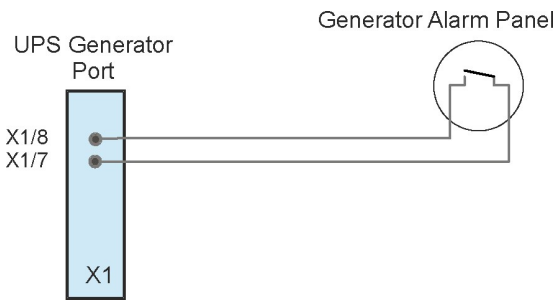

Figure 9.5 Generator ON Connection

9.2.2 Output dry port (X2)

Terminal	Contact	Signal	Display	Function	Relay
X2 /12	Com	ALARM	COMMON_ALARM	Common	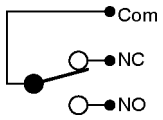
X2 /11	N/C			No Alarm Condition	
X2 /10	N/O			Common Alarm (system)	
X2 /9	Com	ALARM	BATTERY_LOW	Common	
X2 /8	N/C			Battery OK	
X2 /7	N/O			Battery Low	
X2 /6	Com	MESSAGE	LOAD_ON_INV	Common	
X2 /5	N/C			Load On Bypass (mains)	
X2 /4	N/O			Load On Inverter	
X2 /3	Com	ALARM	MAINS_OK	Common	
X2 /2	N/C			Mains Not Present	
X2 /1	N/O			Mains Present	

X2 outputs are switched by volt-free contacts and are suitable for driving an external alarm panel or providing automatic and orderly shutdown of servers, AS400 or automated building systems.

The contacts are rated at a maximum of 30 Vac/1A or 60 Vdc/0.5A

9.2.3 Battery temperature sensor (X3)

Terminal	Contact	Signal	Function
X3 /2	●——○	GND	**Battery temperature** Only use the battery temperature sensor supplied by Rehlko. When fitted it displays the battery temperature on the module LCD display.
X3 /1	◀——○	+3.3 Vdc	

The battery temperature sensor option can be used to regulate the battery charging current according to battery temperature (e.g. 2.30 V/cell @ 15°C linearly to 2.23 V/cell @35°C. This maximises the battery life and optimises battery recharge times.

The sensor is supplied with a 1.8m cable, if a longer cable is required it can be extended up to 15m. Notes:

a. The supplied battery sensor adhesive is suitable for use on aluminium, stainless steel and enamelled steel only.
b. The option kit does not include input/output breakers. A readily accessible disconnect device shall be incorporated external to the equipment
c. The battery temperature probe is a Class 2 device (SELV Circuits). Please route the cable to maintain a minimum of 6 mm from primary circuits.

To fit the battery temperature sensor:

1. First define the position of the sensor. It is best to place it where the temperature is highest, typically on the top of the battery or battery cabinet.

Thread the cable through to the communications interface board and connect it to X3/1 and X3/2 (these connections are not polarity sensitive).

© Rehlko 2026

9.2.4 MODBUS Communications bus (X4)

Terminal	Signal	Function
X4 /3	GND	**MODBUS** This port is not currently implemented
X4 /2	MODBUS RS485L	
X4 /1	MODBUS RS485H	

9.2.5 CAN BUS Communications bus (X5)

Terminal	Function		
	Can Bus	RS485	
X5 /3	GND	GND	**CAN BUS** This port is not currently implemented
X5 /2	CANL	MODBUS RS485L	
X5 /1	CANH	MODBUS RS485H	

9.2.6 Analog input port (X6)

Terminal	Contact	Signal	Function	
X6 / 8		IN	ANALOG IN 4	All X6 inputs are software defined and can be rated as follows: – Analog 10-10V (0-100%) – Analog 4-20mA (0-100%) – Digital 0-24V (0-1) VIH to be defined – Max. 24 Vdc
X6 / 7		GND		
X6 / 6		IN	ANALOG IN 3	
X6 / 5		GND		
X6 / 4		IN	ANALOG IN 2	
X6 / 3		GND		
X6 / 2		IN	ANALOG IN 1	
X6 / 1		GND		

9.2.7 Configurable input dry port (X7)

Terminal	Contact	Signal	Function	
X7 / 8		GND	CUSTOMER IN 4	X7 inputs are used for customer-defined functions. These inputs are connected to volt-free switch contacts and can be configured by the commissioning engineer to be N/ O or N/C according to the function requirements.
X7 / 7		+24 Vdc		
X7 / 6		GND	CUSTOMER IN 3	
X7 / 5		+24 Vdc		
X7 / 4		GND	CUSTOMER IN 2	
X7 / 3		+24 Vdc		
X7 / 2		GND	CUSTOMER IN 1	
X7 / 1		+24 Vdc		
Note: These inputs control 24V isolation relays on the communications interface board. The +24 Vdc voltages shown in this table are the relay coil open-circuit voltages				

All cables connected to X7 are inputs and the connected cables should be rated at <50 Ohms impedance @10 mA.

9.2.8 Configurable input dry port (X8)

Terminal	Contact	Signal	Function	
X7 / 8		GND	CUSTOMER IN 8	X7 inputs are used for customer-defined functions. These inputs are connected to volt-free switch contacts and can be configured by the commissioning engineer to be N/O or N/C according to the function requirements.
X7 / 7		+24 Vdc		
X7 / 6		GND	CUSTOMER IN 7	
X7 / 5		+24 Vdc		
X7 / 4		GND	CUSTOMER IN 6	
X7 / 3		+24 Vdc		
X7 / 2		GND	CUSTOMER IN 5	
X7 / 1		+24 Vdc		
Note: These inputs control 24V isolation relays on the communications interface board. The +24 Vdc voltages shown in this table are the relay coil open-circuit voltages				

All cables connected to X8 are inputs and the connected cables should be rated at <50 Ohms impedance @10 mA.

9.2.9 +24 Vdc Output port (X9)

Terminal	Signal	Function
X9/ 2	+24 Vdc	This is a UPS-protected +24 Vdc source that can be used to power an external devices, such as a relay, that is used as part of the control mechanism that govern the dry port switched inputs. Rated @ 100mA Max.
X9 /1	GND (0V)	

9.2.10 Configurable output dry port (X10)

Terminal	Contact	Function		Relay
X10 /12	Com	CUSTOMER OUT 4	X10 outputs are used for customer-defined functions. These outputs are switched by volt-free relay contacts and can be configured by the commissioning engineer to be N/O or N/C according to the function requirements. The contacts are rated at a maximum of 30 Vac/1A or 60 Vdc/0.5A	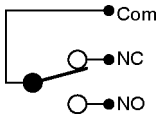
X10 /11	N/C			
X10 /10	N/O			
X10 /9	Com	CUSTOMER OUT 3		
X10 /8	N/C			
X10 /7	N/O			
X10 /6	Com	CUSTOMER OUT 2		
X10 /5	N/C			
X10 /4	N/O			
X10 /3	Com	CUSTOMER OUT 1		
X10 /2	N/C			
X10 /1	N/O			

9.2.11 Configurable output dry port (X11)

Terminal	Contact	Function		Relay
X10 /12	Com	CUSTOMER OUT 8	X11 outputs are used for customer-defined functions. These outputs are switched by volt-free relay contacts and can be configured by the commissioning engineer to be N/O or N/C according to the function requirements. The contacts are rated at a maximum of 30 Vac/1A or 60 Vdc/0.5A	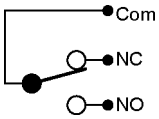
X10 /11	N/C			
X10 /10	N/O			
X10 /9	Com	CUSTOMER OUT 7		
X10 /8	N/C			
X10 /7	N/O			
X10 /6	Com	CUSTOMER OUT 6		
X10 /5	N/C			
X10 /4	N/O			
X10 /3	Com	CUSTOMER OUT 5		
X10 /2	N/C			
X10 /1	N/O			

9.2.12 Serial RS-232 (J1) and USB computer interface

A serial RS 232 interface is available through a standard Sub D9 **female** socket (J1) or via the USB port.

Note: only one of these ports can be active at a time with the USB port being given the priority.

When used with appropriate power management software the serial RS-232 interface allows a computer to continuously monitor the input mains voltage and UPS status, and display messages in response to any UPS system changes.

USB Port

To establish communication between the UPS and a computer, connect the USB cable that is supplied with the UPS between the UPS USB port and the USB port on the computer. The USB port is compliant with USB 1.1 protocol.

RS232 Port

Figure 9.6 shows the connector pin-out for a 9-pin and 25-pin.

Note that the maximum length for the interconnecting RS232 cable is 15m.

A USB port can also be provided on the optional relay card fitted to card slot 2

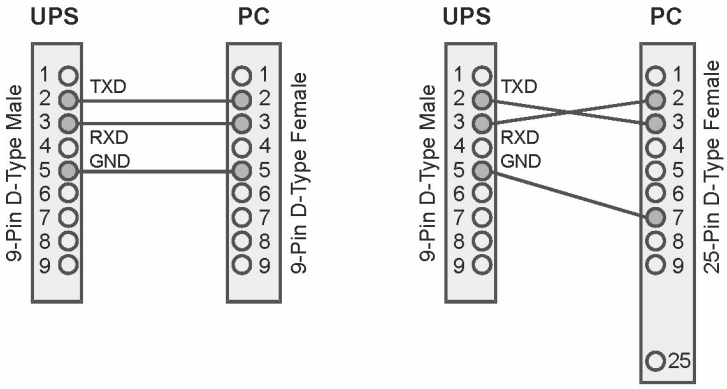

Figure 9.6 PC Serial port interface cable connectors

9.2.13 Graphical display interface (J3)

J3 is an RJ45 connector which interfaces the UPS with the system control panel mounted on the door of the distribution frame. (is this fitted in slave frames?)

9.2.14 Status LEDs

Two LEDs on the communications interface board indicate the board's operating status:

- the green led indicates the UPS cabinet's master/slave status in a multi-module system

  flashing once/sec = interface is master (1st cabinet)

  flashing twice/sec = Interface is slave (2nd - 5th cabinet)
- when lit, the red led signifies a communications interface board malfunction

9.3 High voltage interface board

The high voltage interface contains three connectors, X12, X13 and X14. These are located behind a safety cover adjacent to the high voltage test points.

9.3.1 High voltage configurable input dry port (X12)

Terminal	Contact	Function	
X12 / 8	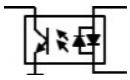	HV CUSTOMER IN 4	X12 inputs are used for customer-defined functions. These opto-isolated inputs are rated at 87-277 Vac 50/60 Hz
X12 / 7			
X12 / 6		HV CUSTOMER IN 3	
X12 / 5			
X12 / 4		HV CUSTOMER IN 2	
X12 / 3			
X12 / 2		HV CUSTOMER IN 1	
X12 / 1			

9.3.2 High voltage configurable output dry port (X13)

Terminal	Contact	Function		Relay
X12 / 12	Com	HV CUSTOMER OUT 4	X13 outputs are used for customer-defined functions. These outputs are switched by volt-free relay contacts and can be configured by the commissioning engineer to be N/O or N/C according to the function requirements.The contacts are rated at a maximum of 277 Vac /5A max or 30 Vdc/ 5A max	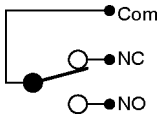
X12 / 11	N/C			
X12 / 10	N/O			
X12 / 9	Com	HV CUSTOMER OUT 3		
X12 / 8	N/C			
X12 / 7	N/O			
X12 / 6	Com	HV CUSTOMER OUT 2		
X12 / 5	N/C			
X12 / 4	N/O			
X12 / 3	Com	HV CUSTOMER OUT 1 (Default use for bypass key interlock function.)		
X12 / 2	N/C			
X12 / 1	N/O			

9.3.3 Synchronisation input port (X14)

Term	Contact	Signal	Function	
X12 / 3		IN	Synchronisation input (ac)	X14 is used to connect an alternative AC synchronisation source for the inverter system. Max input rating is 415 Vac. This port is not currently implemented
X12 / 2		–	Not used	
X12 / 1	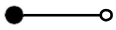	GND	Synchronisation input (ac)	

© Rehlko 2026

9.4 Parallel interface

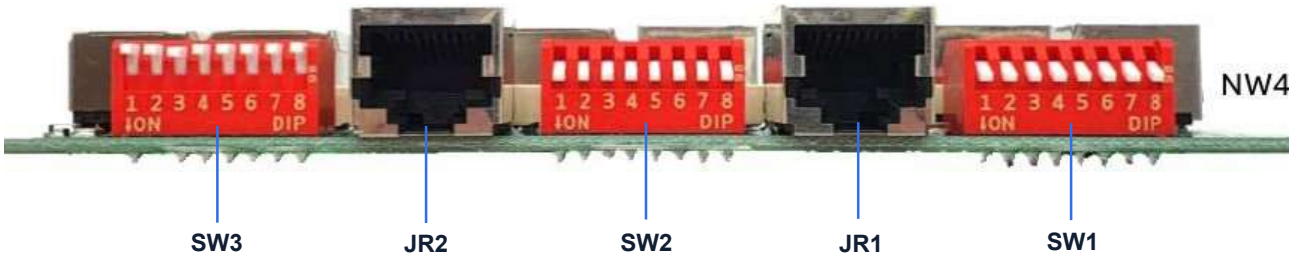

Figure 9.7 Parallel interface board

The parallel interface board is used to connect the external parallel bus cables between the UPS cabinets in a parallel-cabinet system, as described on page 9. The cables are supplied as part of the paralleling kit and will usually be connected by the commissioning engineer who will also set the parallel configuration DIP switches (SW1-SW3).

WARNING: Do not change the configuration DIP switches once they have been set.

The cables must be connected in a ring fashion. For example, in a three cabinet system:

1. Connect JR1 in cabinet 1 to JR2 in cabinet 2.
2. Connect JR1 in cabinet 2 to JR2 in cabinet 3.
3. Connect JR1 in cabinet 3 to JR2 in cabinet 1.

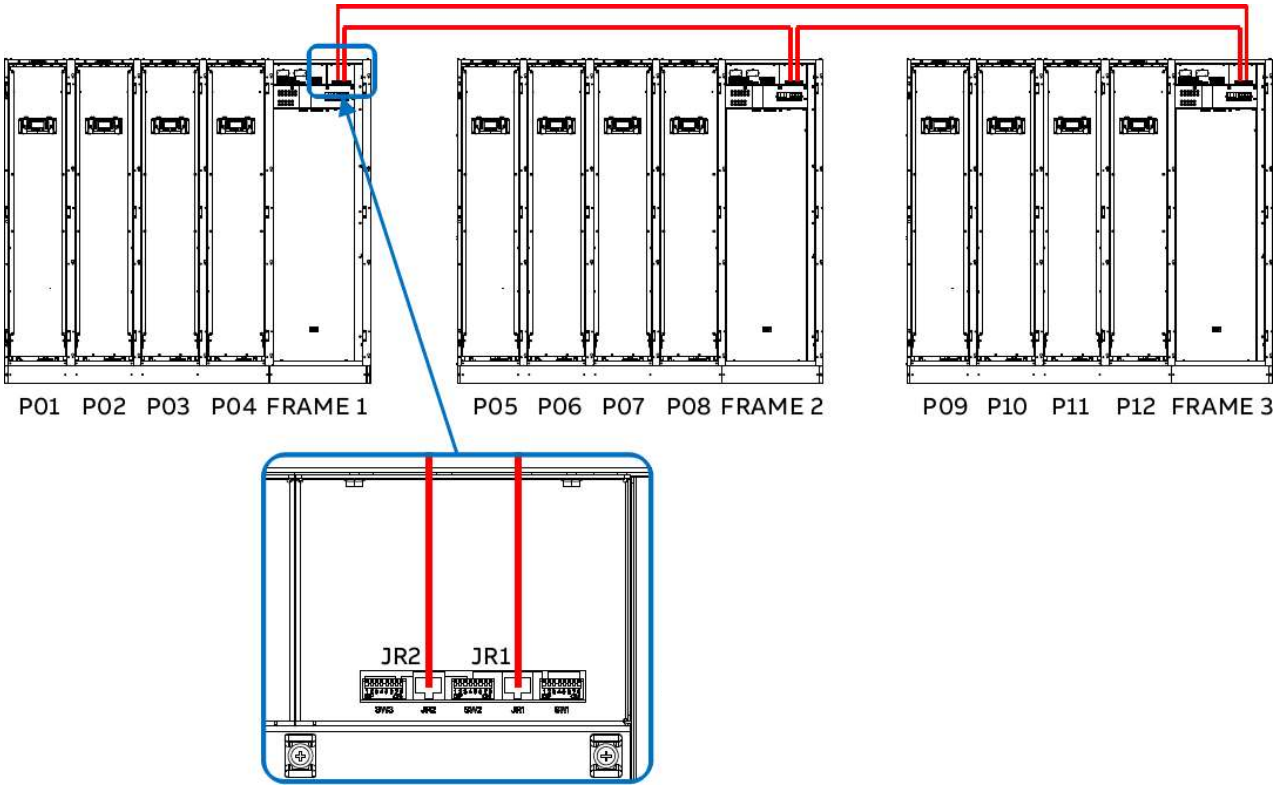

Figure 9.8 External parallel bus ring configuration

9.5 Network interface card slots

The communications panel contains two card slots that can be used with a range of network interface cards (NICs) to interface the UPS with a building management system or computer network (WAN/LAN). Using a suitable network interface card the UPS can be monitored and interrogated by the following protocols:

- Simple Network Management Protocol (SNMP)
- MODBUS over TCP/IP
- MODBUS over RS-485

SNMP is a world-wide, standardised communication protocol and the one that is used most often to integrate the UPS with a wider building/network management system. It can be used to monitor any network-connected device via a simple control language and display the results in an application running within a standard web browser.

An SNMP/Ethernet adapter card contains an RJ-45 connector which can be connected to the network using a standard CAT-5 cable. Once connected, the UPS-Management software agent which is installed in the SNMP adapter can monitor the UPS operation and output its data to the connected network in SNMP format. In a parallel UPS system such as the PW MF1500 DPA the SNMP interface can communicate 'system-wide' data or data for an individual UPS module.

The SNMP adaptor card requires a PC with terminal connections and, for normal operation, at least one Ethernet connection. The SNMP card enables event/alarm email traps, server shut down (with optional licenses) and other tasks; and can also be integrated with BMS software over a local area network (LAN) for SNMP or Modbus information over IP.

Alternatively, SNMP connectivity can be implemented using an external SNMP adapter connected to the communications interface board RS232 output (J1).

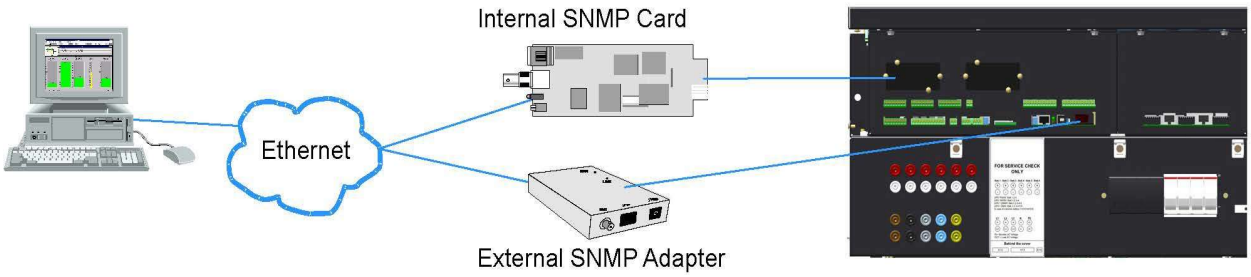

Figure 9.9 SNMP Connection

9.6 UPS Monitoring and automated control software

9.6.1 The importance of UPS management

The utility supply is inevitably unreliable every now and then; and assuring continuous power to all the facilities connected to it can be a difficult task. The situation is further complicated if worldwide systems are managed via a Local or Wide Area Network (LAN/WAN).

However, by interfacing the PW MF1500 DPA UPS system with purpose-designed network management tools, a System Administrator can take measures to back-up data and prevent system errors in the event of a long utility supply outage.

Suitable UPS management software can enable a System Administrator to monitor all attached networks from a central point and identify bottlenecks at an early stage but, in spite of extensive system monitoring, serious damage can still occur if an administrator fails to intervene in a timely manner. It is therefore important that, when appropriate, the installed UPS software can react automatically to shut down the supplied system in a safe and controlled manner.

Rehlko considers it important to have a complete solution for its UPS systems and offers its customers a number of remote control and monitoring tools to provide optimum protection.

Three (optional) monitoring systems are available for use with the PW MF1500 DPA UPS system:

- SNMP – can be used for monitoring and controlled UPS shutdown
- WAVEMON – can be used for monitoring and controlled UPS shutdown
- PowerREPORTER – can be used to automatically email details of monitored parameters and alarm events to Rehlko for appropriate service support response

9.6.2 SNMP monitoring software

The SNMP adapter described above requires a PC with terminal connections and, for normal operation, at least one Ethernet network connection. It also requires that the network operating system in use is SNMP-compatible.

9.6.3 WAVEMON UPS monitoring and control software

WAVEMON is a bespoke software package, designed to operate in conjunction with many of the systems supplied by Rehlko, which features both UPS monitoring and automatic UPS/server shutdown facilities.

The package is installed on a local PC and communicates with the UPS via USB or an RS-232 serial cable so does not require the purchase of an SNMP card or adapter.

The main features of WAVEMON are:

- on-screen autonomy time/battery time countdown
- on-screen server log-off and shutdown procedure
- time and date stamp event log
- extensive logging of all UPS activity and power quality data
- permits alarm warnings to be monitored remotely via email
- scheduled UPS service mode and other systems status
- graphical user interface for Windows-compatible platforms
- automatic unattended local shutdown
- special modules for MS-Office software to close and save open documents
- compatible with all optional modules like UPSDIALER, SNMP adaptors, temperature sensors, etc.

Functional description

WAVEMON is a client/server software application designed for networks and local workstations. In general, it consists of two parts: the server module of the UPS management software is *UPSMAN,* which communicates with the UPS via an RS232/USB interface. Running as a background application, *UPSMAN* collects and interprets the messages received from the UPS and

© Rehlko 2026

places them at the disposal of the client module *UPSMON,* as well as any connected SNMP-based instrumentation and control system.

If *UPSMAN* detects voltage variations or a power failure, it can execute various ‘system event’ routines, by means of which, for example, the server is switched off or a warning/alarm is sent to the connected users. These ‘system event’ routines are a part of the management software and can be configured in to suit local application requirements.

The PW MF1500 DPA UPS software unit can be integrated into a network in two ways:

1. By the server which is supplied by the UPS itself and has been integrated into the network.
   In most cases this server is used as a sub-agent and you only need the WAVEMON software (without an SNMP adapter). You will also need to establish an RS232/USB connection between the UPS and computer/server.
2. By the use of an SNMP card/adapter
   An SNMP card/adapter is to be preferred in order to integrate the UPS into the network. In this case up to 50 computers can be shut down in one RCCMD environment. RCCMD (remote console command) is an additional software module that is used in order to execute a command (typically a shutdown command) in a remote system.

Licensing

A licence is issued with every software serial number for use of what is known as the ‘UPS service’ on a single server in connection with one UPS and an unlimited number of connected WINDOWS workstations. For operation with two or more servers, a further licence is required for each additional server. In this case it is of no importance whether the UPS service on these servers is active or whether the server was stopped by a remote UPS service. The same applies to the use of RCCMD with the ‘remote send/receive’ modules for ‘multi-server shutdown’ under NT, UNIX and other operating systems.

The service programs are generally supplied as single licences. In order to use a single CD-ROM for several ‘multi-server shut-down’ units you must acquire additional licence codes.

RCCMD Server shutdown

In order that remote shutdown of servers can take place, initiated by the SNMP card or WAVEMON software, further licenses must be purchased. The license is for the RCCMD client (or listening) software that resides in each target server.

9.6.4 PowerREPORTER™ management software

PowerREPORTER is a remote monitoring and management service which provides peace-of-mind protection by offering a continuous (24/7/365) watch over mission-critical facilities. Continuous monitoring is an affordable insurance policy to detect issues and provide an early warning before they develop into a crisis.

The main features and benefits offered by PowerREPORTER are:

- real time alarm or critical event email notification sent directly to Rehlko service centre
- acquisition of key performance data and productivity information to allow a better understanding of the UPS system performance and quickly troubleshoot downtime events
- improved service level. Combined with a service contract, PowerREPORTER ensures an engineer can determine if site attendance is necessary and bring relevant spare parts
- Monthly status report detailing trends and alarms

An optional battery analysis and care service; PowerNSURE - measures battery voltage, temperature, impedance and prolongs battery service life through the application of battery charge equalization.

Functional description

PowerREPORTER communicates constantly with your UPS system to automatically detect any error or alarm messages. If it encounters an incident, PowerREPORTER will automatically transmit a status message, via email, to the Rehlko service centre providing details relating to the identified fault, a snapshot of the UPS performance parameters and a device identification string.

The email automatically alerts the service centre personnel who then remotely diagnose the UPS incident and liaise with the company's field service team so that they can reach the facility with appropriate spare parts within the contracted service agreement time-frame.

© Rehlko 2026

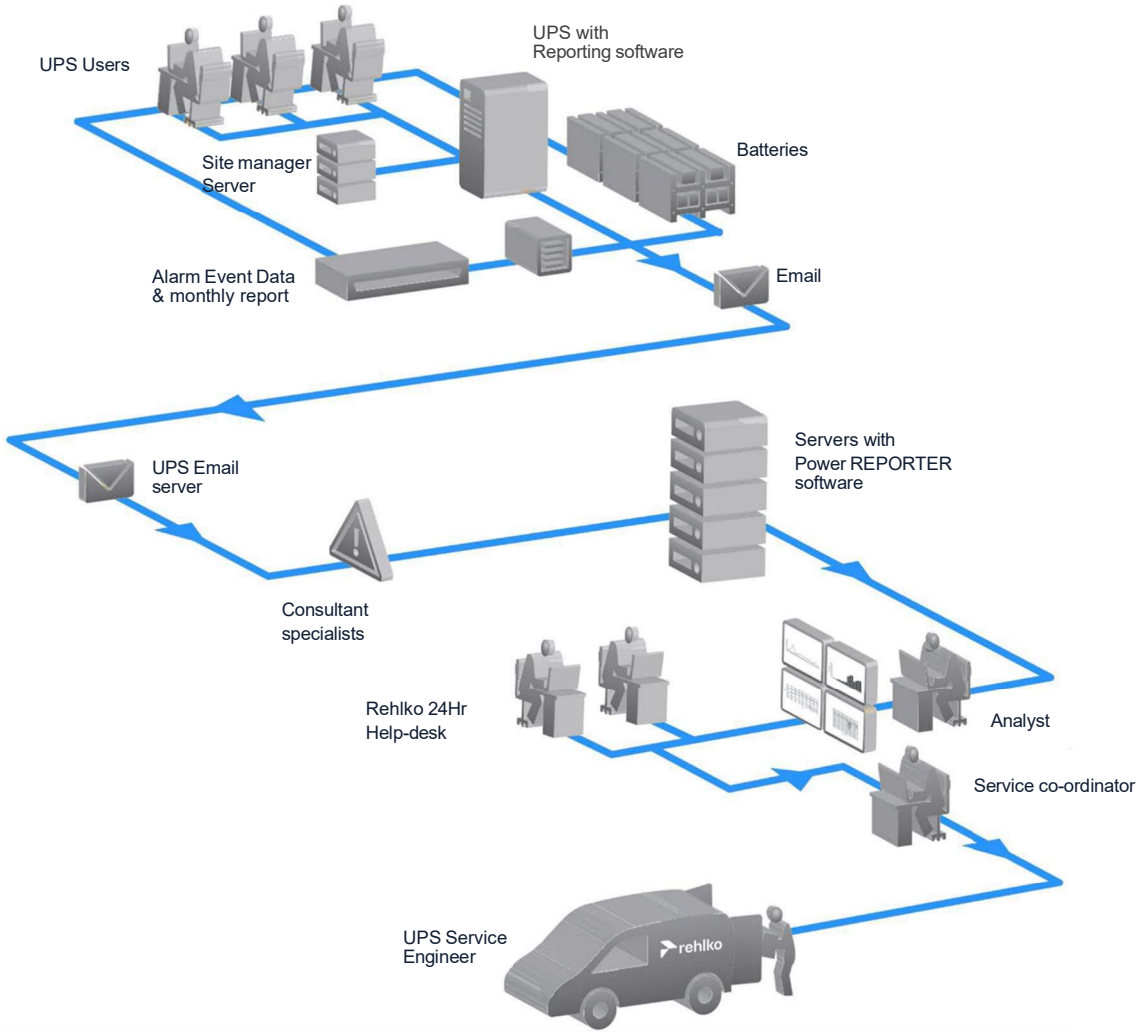

Figure 9.10 Remote monitoring communications chain

10. Specification

10.1 UPS Cabinet general specification

10.1.1 500 kVA/kW Cabinet

	Number of UPS Modules	
	1	2
System power rating (per cabinet) (kVA/kW)	250	500
UPS type	On-line, transformerless, modular, DPA	
Parallel cabinet capability (MVA/MW)	2.0 (up to 4 cabinets)	
Battery	Bespoke. Housed externally.	
Performance specification	VFI-SS-111	
UPS Frame Dimensions (W x D x H) mm	1422 x 1000 x 2000	
Weight (without UPS modules) kg	385	
Weight (with UPS modules) kg	740	1094
UPS cabinet colour	RAL 9005 (Black)	
Ingress protection	IP 20	
Cable entry	Top or Bottom (to be defined at order)	
Ventilation	Front to Top	
Service access	Front	
Installation clearances mm	Front 1500 mm, Top 500 mm, Rear 0.0 mm	

10.1.2 750 kVA/kW Cabinet

	Number of UPS Modules		
	1	2	3
System power rating (per cabinet) (kVA/kW)	250	500	750
UPS type	On-line, transformerless, modular, DPA		
Parallel cabinet capability (MVA/MW)	3.0 (up to 4 cabinets)		
Battery	Bespoke. Housed externally.		
Performance specification	VFI-SS-111		
UPS Frame Dimensions (W x D x H) mm	1892 x 1000 x 2000		
Weight (without UPS modules) kg	466		
Weight (with UPS modules) kg	821	1176	1530
UPS cabinet colour	RAL 9005 (Black)		
Ingress protection	IP 20		
Cable entry	Top or Bottom (to be defined at order)		
Ventilation	Front to Top		
Service access	Front		
Installation clearances mm	Front 1500 mm, Top 500 mm, Rear 0.0 mm		

© Rehlko 2026

10.1.3 1000 kVA/kW Cabinet

	Number of UPS Modules			
	1	2	3	4
System power rating (per cabinet) (kVA/kW)	250	500	750	1000
UPS type	On-line, transformerless, modular, DPA			
Parallel cabinet capability (MVA/MW)	4.0 (up to 4 cabinets)			
Battery	Bespoke. Housed externally.			
Performance specification	VFI-SS-111			
UPS Frame Dimensions (W x D x H) mm	2235 x 1000 x 2000			
Weight (without UPS modules) kg	547			
Weight (with UPS modules) kg	902	1256	1611	1965
UPS cabinet colour	RAL 9005 (Black)			
Ingress protection	IP 20			
Cable entry	Top or Bottom (to be defined at order)			
Ventilation	Front to Top			
Service access	Front			
Installation clearances mm	Front 1500 mm, Top 500 mm, Rear 0.0 mm			

10.1.4 1500 kVA/kW Cabinet

	Number of UPS Modules					
	1	2	3	4	5	6
System power rating (per cabinet) (kVA/kW)	250	500	750	1000	1250	1500
UPS type	On-Line, transformerless, Modular, DPA					
Parallel cabinet capability (MVA/MW)	6.0 (up to 4 cabinets)					
Battery	Bespoke. Housed externally					
Performance specification	VFI-SS-111					
UPS Frame Dimensions (W x D x H) mm	3045 x 1000 x 2000					
Weight (without UPS modules) kg	895250					
Weight (with UPS modules) kg	1250	1604	1959	2313	2668	3022
UPS cabinet colour	RAL 9005 (Black)					
Ingress protection	IP 20					
Cable entry	Top or Bottom (to be defined at order)					
Ventilation	Front to Top					
Service access	Front					
Installation clearances mm	Front 1500 mm, Top 500 mm, Rear 0 mm					

© Rehlko 2026

10.2 Electrical characteristics

Input Characteristics	1000 kVA	1250 kVA	1500 kVA
Input AC power distribution system compatibility (earthing system)	TN-S, TN-C, TN-C-S		
Input AC power distribution system wiring	3ph + Neutral + PE		
Input rated short-time withstand current (Icc)	120 kA		
Additional information	Single feed (rectifier and internal bypass fed by separate circuits within each UPS module)		
Input voltage	380, 400, 415 VAC ph-ph 220, 230, 240 VAC ph-N		
Input voltage tolerance (@40°C)	(-30% to +15%) < 60% load (-20% to +15%) < 80% load (-10% to +15%) < 100% load		
Input rated frequency	50 Hz or 60 Hz		
Input frequency tolerance	40 Hz or 70 Hz (nominal frequency ±10%)		
Maximum input rated current (@400V) (with batteries charged)	1496A	1870A	2245A
Maximum input rated current (@400V) (with batteries charging)	1512A	1890A	2268A
Input distortion THDI – 100% load (linear) in normal mode	<3% [at 400V input voltage <2% tolerance ±0.3% may apply]		
Input distortion THDI – 100% load (non-linear) in normal mode	<3% [at 400V input voltage <2% tolerance ±0.3% may apply]		
Rectifier input power factor	0.99 @ 100% rated linear/non-linear load		
Rectifier inrush current	<100% of rated current		
Output Characteristics	**1000 kVA**	**1250 kVA**	**1500 kVA**
Output AC power distribution system	TN-S, TN-C, TN-C-S, TT		
Output AC power distribution system wiring	3 ph + Neutral + PE		
Output Rated Voltage	380, 400, 415 VAC ph-ph 220, 230, 240 VAC ph-N		
Output voltage variation – normal or battery operation	± 1%		
Total harmonic distortion – normal or battery mode	< 2% With Linear Load, <4% with non-linear load		
Voltage transient and recovery time – 100% step load (linear)	4%, recovery within 2s 100% step load (linear or non-linear)		
Voltage transient and recovery time – transfer Normal/Battery	<4%, recovery within 2s		
Output rated frequency	50 Hz or 60 Hz		
Output frequency tolerance (normal mode)	< ±2% or < ±4% selectable (synchronized with mains)		
Output frequency tolerance (battery mode)	± 0.1% of rated frequency (free-running)		
Maximum phase error when in sync with bypass	2°		
Output rated current (@400VAC)	1450A	1812A	2174A
Output overload (% of rated current / time duration) at 40 °C	125% / 10 minutes 150% / 1 minute		
Output current limit, “short-circuit current” (% or rated current /time duration), @400V rated voltage	2.3 x In, 250 ms 2.5 x In, 100 ms 2.8 x In, 40 ms		
Fault clearing current (Normal and Battery mode) @400V (40mS)	4060A	5074A	6087A
Load power factor - rated	1.0		
Load power factor - displacement (permissible lead/lag)	0.6 lag to 0.8 lead		
Efficiency	**1000 kVA**	**1250 kVA**	**1500 kVA**
Double conversion efficiency –100% load	96.5%		
Double conversion efficiency –75% load	97.0%		
Double conversion efficiency –50% load	97.4%		
Double conversion efficiency –25% load	97.3%		

© Rehlko 2026

Static Bypass Characteristics	1000 kVA	1250 kVA	1250 kVA
Rated current – @400V	1450A	1812A	2174A
VFD Efficiency at 100% rated load	99%		
Bypass overload (% or rated current/time duration)	110% / continuous 140% / 10 min 190% / 2 min		
Bypass fault clearing ability (% of rated voltage @ 400V)	20 x In / 10 ms		
Bypass voltage tolerance (% of rated voltage @ 400V)	-10% to +15%		

10.3 Battery

	1000 kVA	1250 kVA	1500 kVA
Energy storage type	VRLA (Lead Acid) battery. Available housed in matching battery cabinets or closed/open stands. Size dependant on application. Liion: Housed in purpose designed cabinet including for BMS (Battery management system)		
Technology	Lithium ion, VRLA, NiCd, Ni-Zn		
Design life, or float service life	Lithium ion: 15 years. VRLA, NiCd, Ni-Zn: Ref to battery manufacturer provided information		
Quantity of cells and strings	Lithium ion: 136 cells / 17 modules max 6 frames of 17 modules per string VRLA 12V: 40-50 blocks (standard) NiCd: 400-500 cells		
Nominal voltage	480V - 600V		
Nominal Ah capacity (C10)	Battery type dependant Lithium ion: 67 Ah		
Stored energy time (back-up time @ 100% rated load)	Extended autonomy times without derating. Refer to battery autonomy calculators for correct sizing		
Restored energy time (re-charge time to 90% capacity)	Lithium ion: 3 hours, VRLA: 10 hours (varies on amount and size of used batteries) NiCd: 10 hours		
Ambient reference temperature (To secure maximal service life)	Battery type dependent: Lithium ion: 18-28°C, VRLA: 20-25°C, NiCd: Refer to manufacturer provided information		
Nominal discharge current	2182A to 1745 A	2727A to 2182A	3272A to 3054A
Fault rating current	200 kA		
Float charge voltage	4.20 V/Cell Lithium ion, 2.23 V/Cell VLRA, 1.40 V/Cell NiCd		
End of discharge voltage	3.20 V/Cell Lithium ion, 1.68 V/Cell VLRA, 1.05 V/Cell Ni-Cd		
Charge current limit (or range)	750A	938A	1125A
Charge power limit	300 kW	375 kW	450 kW
Battery ripple current (max)	400 mA (rms)		
DC cable voltage drop recommendation	1% maximum		
Battery temperature compensation	Supported. With optional temperature sensor.		
Battery test	Automatic battery test facility included as standard		

10.4 Environmental and standards

Environmental	1	2	3	4	5	6
UPS Cabinet operating temperature range	0 to 40°C (recommended +20 to +25°C)					
Relative humidity range	< 95% non-condensing					
Battery temperature	VLRA, 20-25°C LIB, 18-28°C					
Storage temperature	-25 to +70°C with humidity < 95% non-condensing Ideally storage between +5°C and +35°C at RH up to 75%					
Maximum altitude without derating	1000m					
Maximum altitude with derating	5000m					
Vibration	IAW EN60721-3-2					
Noise @ 1m (90% fan speed and room temperature of 40°C)	78 dBA					

	1000 kVA	1250 kVA	1500 kVA
Maximum airflow (EN 62040-1-1)	7576 m³ /min	9470 m³ /min	11364 m³ /min
Heat Dissipation with 25% linear load [W]	7053	8817	10580
Heat Dissipation with 40% linear load [W]	10288	12860	15432
Heat Dissipation with 50% linear load [W]	13426	16783	20140
Heat Dissipation with 75% linear load [W]	22539	28174	33809
Heat Dissipation with 100% linear load [W]	35578	44472	53367
Heat Dissipation with 40% non-linear load [W]	12480	15601	18721
Heat Dissipation with 50% non-linear load [W]	15177	18971	22765
Heat Dissipation with 75% non-linear load [W]	23679	29599	35519
Heat Dissipation with 100% non-linear load [W]	36297	453372	54446
Heat Dissipation without load [W/BTU]	4000/13647	5000/17059	6000/20471

Compliance standards	
Safety	IEC/EN62040-1
EMC	IEC/EN62040-2
Performance	IEC/EN62040-3
Manufacturing	ISO 9001:2015, ISO 14001:2015, OHSAS 18001

Standard options	
Top or bottom cable entry	Factory fitted only – not reversible in the field
Separate or common battery connection	To be stated when ordering. Not field-configurable.
External maintenance bypass switch	Range of maintenance bypass switch options are available to suit installation conditions. (No internal maintenance bypass option)
Communications	Communication ports for RS-232, USB, SNMP (optional) Voltage-free output contacts for driving remote alarms facilities Customer interface for remote Power Off, gen-set interface, external bypass etc,.

© Rehlko 2026